THE CITY OF EDINBURG

NOTICE TO BIDDERS

The City of Edinburg is soliciting sealed bids to be received by the City Secretary's Office located at 415 W. University Drive, Edinburg, Texas 78541. City of Edinburg normal business days are Monday through Friday between the hours of 8:00 a.m. to 5:00 p.m. and shall be closed on recognized holidays.

Bids will be received until **3:00 p.m. Central Time**, on **Monday, January 23, 2012**, shortly thereafter all submitted bids will be gathered and taken to the Edinburg City Hall Community Room, 1st Floor, to be publicly opened and read aloud. Any bid received after the closing time will not be accepted and will be returned to the bidder unopened. It is the responsibility of the bidder to see that any bid submitted shall have sufficient time to be received by the City Secretary's Office prior to the bid opening date and time. The receiving time in the City Secretary's Office will be the governing time for acceptability of the bids. Bids will not be accepted by telephone or facsimile machine. All bids must bear original signatures and figures. The Bid shall be for:

BID NO. 2012-37
LIFT STATION FENCE PROJECT

Bidders receiving a "NOTICE TO BIDDERS" and/or "REQUEST FOR PROPOSALS" notice in the mail or reading same in the newspaper are advised that the bidding documents can be downloaded from the City of Edinburg web page address: www.cityofedinburg.com, or may obtain copies of same by contacting the office of:

LORENA FUENTES, PURCHASING AGENT, LOCATED AT 415 W. UNIVERSITY DRIVE, Edinburg, TX 78541 by calling (956) 388-8972 or by e-mailing your request to the following e-mail address: lfuentes@cityofedinburg.com

If you have any questions or require additional information regarding this bid, please contact Mr. Jose Anguiano, Waste Water Treatment Plant Superintendent, at (956) 292-2042.

If Hand-delivering Bids: 415 West University Drive,
c/o City Secretary Department (1st Floor)

If using Land Courier (i.e., FedEx, UPS): City of Edinburg
c/o City Secretary
415 West University Drive
Edinburg, Texas 78541

If Mailing Bids: City of Edinburg
c/o City Secretary
P.O. Box 1079
Edinburg, TX 78540-1079

The City of Edinburg reserves the right to refuse and reject any or all bids and to waive any or all formalities or technicalities and to accept the bid deemed most advantageous to the City, and hold the bids for a period of **60** days without taking action.

Bids must be submitted in an envelope sealed with tape and prominently marked on the lower left hand corner of the bid envelope with corresponding bid number and title.

CITY OF EDINBURG
INSTRUCTIONS TO BIDDERS

DEVIATION FROM SPECIFICATION

Please read your specifications/requirements thoroughly and be sure that the SERVICES offered comply with all specifications/requirements. Any variation from the specifications/requirements must be clearly indicated by letter attached to your bid referencing variations on a point-by-point basis. If no exceptions are noted, and you are the successful bidder, it will be required that the SERVICES be provided as specified.

PURPOSE

1. The purpose of these specifications/requirements and bidding documents is for the **LIFT STATION FENCE PROJECT** for the City of Edinburg.

2. The SERVICES to be furnished under this bid shall be as specified in these bid documents. All specifications/requirements shown are minimum. There is no intention to disqualify any bidder who can meet these specifications/requirements.

SUBMITTAL OF BID

Bids will be submitted in sealed envelopes upon the blank bid form attached hereto. Each bid must be completely filled out and **SUBMITTED IN ORIGINAL FORM**, complete with all supporting documentation. Bids submitted by facsimile (fax) or electronically will **NOT** be accepted. Submittal of a bid in response to this solicitation for Bids constitutes an offer by the Bidder. Bids which do not comply with these specifications/requirements may be rejected at the option of the City. Bids must be filed with the City of Edinburg, before opening day and hour. No late Bids will be accepted. They will be returned to Bidder unopened (if properly identified).

If Hand-delivering Bids:	415 West University Drive, c/o City Secretary Department (1st Floor)
If using Land Courier (i.e., FedEx, UPS):	415 West University Drive, c/o City Secretary Department (1st Floor), Edinburg, Texas 78541
If Mailing Bids:	P.O. Box 1079, Edinburg, TX 78540-1079

PREPARATION OF BID

Bids MUST give full firm name and address of bidder, and be manually signed. Failure to do so will disqualify your bid. Person signing bid must show title or AUTHORITY TO BIND HIS/HER FIRM IN A CONTRACT.

Firm name and authorized signature must appear on each page that calls for this information. The legal status of the Respondent/Bidder whether corporation, partnership, or individual, shall also be stated in the bid. A corporation shall execute the bid by its duly authorized officers in accordance with its corporate by-laws and shall also list the state in which it is incorporated. A partnership Respondent/Bidder shall give full names and addresses of all partners. All partners shall execute the bid. Partnership and Individual Respondent/Bidder shall state in the bid the names and addresses of all persons with a vested interest therein. The place of residence of each Respondent/Bidder, or the office address in the case of a firm or company, with county and state and telephone number, shall be given after the signature.

ALTERATIONS/AMENDMENTS TO BID

Bids **CANNOT** be altered or amended after opening time. Alterations made before opening time must be initialed by bidder guaranteeing authenticity. No bid may be withdrawn after opening time without acceptable reason in writing and only after approval by the City of Edinburg.

INSTRUCTIONS TO BIDDERS (Continued):

SALES TAX
State sales tax must not be included in the bid.

SUBSTITUTIONS
No substitutions or cancellations will be permitted without written approval of City of Edinburg.

NO BID RESPONSE
If unable to submit a bid, bidder should return inquiry giving reasons.

EXCEPTIONS
Any additions, deletions, or variations from the following specifications/requirements must be noted. The bidder shall attach to his/her bid sheet a list of any exceptions to the specifications/requirements if unable to do so, on specification sheet.

DELIVERY
Number of days required to deliver SERVICES after receiving order must be stated in the bid. Failure to so state will obligate bidder to complete service delivery within ONE day. Delivery time may be considered as basis of award.

DELAY IN SERVICE DELIVERY
When delay can be foreseen, Bidder shall give prior notice to City of Edinburg. Bidder must keep City of Edinburg advised at all times of status of order. Default in promised service delivery (without acceptable reasons) or failure to meet specifications/requirements, authorizes the City of Edinburg to purchase such SERVICES elsewhere and charge increase in cost to defaulting vendor. Acceptable reasons for delayed delivery are as follows: Acts of God (floods, tornadoes, hurricanes, etc.), acts of government, fire, strikes, war; Actions beyond the control of the successful bidder.

SERVICE DELIVERED PRICING
Bids in units of quantity specified - extend and show total. In the event of discrepancies in extension, unit prices will govern. Bids subject to unlimited price increase will not be considered.

VALID BID TIME FRAME
The City may hold bids 60 days after bid opening without taking action. BIDDERS shall be required to hold their Bids firm for the same period of time.

RIGHT TO REJECT/AWARD
The City of Edinburg reserves the right to refuse and reject any or all Bids, and to waive any or all formalities or technicalities, and to make such awards of contract as may be deemed to be the best and most advantageous to the City of Edinburg.

MULTIPLE VENDOR CONTRACTS
Bidders are advised that the City of Edinburg may award Service Contracts to multiple vendors based on low bid per item basis. All items specified on the "Bid Form" **must** reflect the individual unit prices. The City of Edinburg reserves the right to award all items individually or in any combination thereof.

INSTRUCTIONS TO BIDDERS (Continued):

INDEMNIFICATION CLAUSE

The Bidder agrees to indemnify and save harmless the City, from all suits and actions of every nature and description brought against them or any of them, for or on account of the use of patented appliances, products or processes, and he shall pay all royalties and charges which are legal and equitable. Evidence of such payment or satisfaction shall be submitted upon request of the Purchasing Agent, as a necessary requirement in connection with the final estimate for payment in which such patented appliance, products or processes are used.

ADDENDA

Bidder shall carefully examine the bid forms, specifications/requirements, and instructions to Bidders. Should the bidder find discrepancies in, or omissions from bid forms, specifications/requirements, or other documents, or should he/she be in doubt as to their meaning, he/she should at once notify the Purchasing Agent (Edinburg City Hall, 956-388-8972) and obtain clarification by addendum prior to submitting any bid. Explanations, interpretations, and supplemental instructions shall be in the form of written Addenda which shall become a part of the Contract documents. Said Addenda shall be mailed, e-mailed, hand delivered and/or faxed, to all prospective Bidders. All Addenda issued in respect to this project shall be considered official changes to the original bid documents. Verbal statements in response to inquiries and/or requests for explanations shall not be authoritative nor binding. It shall be the Bidder(s) responsibility to ensure that they have received all Addenda in respect to this project. Furthermore, Bidders are advised that they must recognize, comply with, and attach a signed copy of each Addendum which shall be made part of their Bid Submittal. Bidder(s) signature on Addenda shall be interpreted as the bidder's "recognition and compliance to" official changes as outlined by the City of Edinburg and as such are made part of the original solicitation documents. Failure of any bidder to receive any such addendum or interpretation shall not relieve such Bidder from its terms and requirements. Addendums are available online at www.cityofedinburg.com.

PAYMENT

The City of Edinburg will execute payment by mail in accordance with the State of Texas Pay Law after SERVICES have been provided and invoiced. No other method of payment will be considered.

SYNONYM

Where in this bid package ITEMS OR SERVICES is used its meaning shall refer to the PURCHASE OF LIFT STATION FENCE PROJECT as specified.

ASSIGNMENT

Neither the Bidder's contract nor payment due to an awarded vendor may be assigned to a third party without the written approval of the Purchasing Department for the City of Edinburg.

INTERPRETATIONS

Any questions concerning the conditions and/or specifications/requirements with regards to this solicitation for Bids shall be directed to the designated individuals as outlined in the Request for Bids. Such interpretations, which may affect the eventual outcome of this request for Bids, shall be furnished in writing to all prospective Bidders via Addendum. No interpretation shall be considered binding unless provided in writing by the City of Edinburg in accordance with paragraph entitled "Addenda".

INSTRUCTIONS TO BIDDERS (Continued):

STATUTORY REQUIREMENTS

It shall be the responsibility of the successful Bidder to comply with all applicable State & Federal laws, Executive Orders and Municipal Ordinances, and the Rules and Regulations of all authorities having jurisdiction over the work to be performed hereunder and such shall apply to the contract throughout, and that they will be deemed to be included in the contract as though written out in full in the contract documents. (To include issues related to health, environmental, and safety to name a few.)

BIDDER'S EMPLOYEES

Neither the Bidder nor his/her employees engaged in fulfilling the terms and conditions of this Purchase Contract shall be considered employees of the City. The method and manner of performance of such undertakings shall be under the exclusive control of the vendor on contract. The City shall have the right of inspection of said undertakings at any time.

RIGHT TO WAIVE

City of Edinburg reserves the right to waive or take exception to any part of these specifications/requirements when in the best interest of the City of Edinburg.

COOPERATIVE PRICING

Bidders are advised that in addition to responding to our "local" solicitation for bids/Bids with Dealer pricing, vendors/contractors are encouraged to provide pricing on the below referenced items/products/services based on BuyBoard, TX-MAS, H-GAC and/or any other State of Texas recognized and approved cooperative which has complied with the bidding requirements for the State of Texas. If bidding other than or in addition to "dealer" pricing, kindly duplicate the bid forms for each bid being provided from a cooperative contract. Any and all applicable fees must be included. All cooperative pricing must be submitted on or before bid opening date and hour.

TIME ALLOWED FOR ACTION TAKEN

The City of Edinburg may hold bids **60** days after the opening of Bids without taking action. Bidders are required to hold their Bids firm for same period of time.

PREPARATION OF BID

The City of Edinburg shall not be held liable for any costs incurred by any bidder for work performed in the preparation of and production of a bid or for any work performed prior to execution of contract.

CONFIDENTIAL INFORMATION

Any information deemed to be confidential by the bidder should be clearly noted on the pages where confidential information is contained; however, the City cannot guarantee that it will not be compelled to disclose all or part of any public record under Texas Public Information Act, since information deemed to be confidential by the bidder may not be considered confidential under Texas Law, or pursuant to a Court order.

VERBAL THREATS

Any threats made to any employee of the City, be it verbal or written, to discontinue the providing of item/material/services for whatever reason and/or reasons shall be considered a breach of contract and the City will immediately sever the contract with the Vendor on contract.

MATHEMATICAL ERRORS

In the event that mathematical errors exist in any bid, unit prices/rates -v- totals, unit prices/rates will govern.

INSTRUCTIONS TO BIDDERS (Continued):

AUDIT

The City of Edinburg reserves the right to audit the vendor's books and records relating to the performance of this contract. The City of Edinburg, at its own expense, shall have the right at all reasonable times during normal business hours and upon at least twenty-four (24) hours' advance notice, to audit, to examine, and to make copies of or extracts from the books of account and records maintained by the vendor(s) with respect to the Supply/Service and/or Purchase Contract. If such audit shall disclose overpayment by City to vendor, written notice of such overpayment shall be provided to the vendor and the amount of overpayment shall be promptly reimbursed by vendor to the City. In the event any such overpayment is not paid within ten (10) business days after receipt of such notice, the unpaid amount of such overpayment shall bear interest at the rate of one percent (1%) per month from the date of such notice until paid.

PAST PERFORMANCE

Vendor's past performance shall be taken into consideration in the evaluation and award of Service Contract for the Purchase of SERVICES.

JURISDICTION

Contract(s) executed as part of this solicitation shall be subject to and governed under the laws of the State of Texas. Any and all obligations and payments are due and performable and payable in Hidalgo County, Texas.

VENUE

The parties agree that venue for purposes of any and all lawsuits, cause of action, arbitration, and/or any other dispute(s) shall be in Hidalgo County, Texas.

CONFLICT OF INTEREST

CHAPTER 176 OF THE TEXAS LOCAL GOVERNMENT CODE

Effective January 1, 2006, Chapter 176 of the Texas Local Government Code requires that any vendor or person considering doing business with a local government entity disclose in the Questionnaire Form CIQ, the vendor or person's affiliation or business relationship that might cause a conflict of interest with a local government entity. By law, this questionnaire must be filed with the records administrator of the City of Edinburg not later than the 7th business day after the date the person becomes aware of facts that require the statement be filed. See Section 176.006, Local Government Code. A person commits an offense if the person violates Section 176.006, Local Government Code. An offense under this section is a Class C misdemeanor. For more information or to obtain Questionnaire CIQ go to the Texas Ethics Commission web page at www.ethics.state.tx.us/forms/CIQ.pdf.

IF YOU HAVE ANY QUESTIONS ABOUT COMPLIANCE, PLEASE CONSULT YOUR OWN LEGAL COUNSEL. COMPLIANCE IS THE INDIVIDUAL RESPONSIBILITY OF EACH PERSON OR AGENT OF A PERSON WHO IS SUBJECT TO THE FILING REQUIREMENT. AN OFFENSE UNDER CHAPTER 176 IS A CLASS "C" MISDEMEANOR.

AWARD

For purposes of this project, award will be contingent on approval of budget.

SPECIAL CIRCUMSTANCES

In the event that the City of Edinburg has an immediate need for a particular service(s) that is/are on contract and the successful vendor on contract is not able to meet the special service delivery needs of the City of Edinburg, the City of Edinburg reserves the right to purchase such services elsewhere to fulfill its' immediate need.

INSTRUCTIONS TO BIDDERS (Continued):

TERMINATION OF CONTRACT

The City of Edinburg reserves the right to terminate the contract if, in the opinion of the City of Edinburg, the successful vendor's performance is not acceptable, if the City is being repeatedly over charged, improperly charged, no funds are available, or if the City wishes, without cause, to discontinue this contract. Termination will be in written form allowing a 30-day notice. The bidder shall be afforded the same right to terminate this contract in the same manner.

INSURANCE REQUIREMENTS

If the contract amount is over twenty-five-thousand dollars ($25,000) for construction of the project, the successful bidder shall provide a bid guarantee, give a good and sufficient bond in the full amount of the contract price for the faithful performance of such contract, executed by a surety company authorized to do business in the State of Texas, in accordance with Article 5160, Vernon's Texas Civil Statutes, and amendments thereto. A payment bond in the full amount of the contract price to assure payment shall be required by law of all persons supplying labor and material in the execution of the project provided for in the contract documents.

A bid guarantee equivalent to five percent (5%) of the bid price will be required from each bidder. The "bid guarantee" shall consist of a firm commitment, such as a bid bond, certified check or other negotiable instrument accompanying a bid as assurance that the bidder will upon acceptance of his/her bid, execute such contractual documents as may be required within the time specified.

A performance bond on the part of the contractor for one-hundred percent (100%) of the contract price will be required. A "performance bond" is one executed in connection with a contract to secure fulfillment of all the contractor's obligations under such contract.

A payment bond on the part of the contractor for one-hundred percent (100%) of the contract price will be required. A "payment bond" is one executed in connection with a contract to assure payment, as required by law, of all persons supplying labor and material in execution of the work provided for in the contract documents.

Bidders are expressly advised to review the contract documents fully and insurance requirements of the proposed contract as to their legal requirements and the causes which may lead to the disqualification of a bidder and/or rejection of a bid proposal. No bid may be withdrawn within a period of sixty (60) days after the dated fixed for opening the bids. Unless all bids are rejected, the Owner will give Notice of Award of Contract to the successful bidder as soon as possible consistent with the time for a thorough analysis of bids submitted. Bidders are expected to inspect the site of work and to inform themselves regarding all local conditions which may affect their bid.

A bid guarantee, performance and payment bond will not be required for contracts zero to $25,000. The City will specify in the contract that no money will be paid to the contractor until the project has been completed and final acceptance has been made by the City.

Staff may waive insurance requirements for contracts $0 - $4,999.99, including but not limited to contracts for food, materials, supplies, and construction. Workers' Compensation in amounts which satisfy statutory coverage shall be required for construction projects.

The following insurance requirements will be included in all City contracts of $5,000 - $14,999.99. In contracts not involving building and construction projects, as that activity is defined in TEX. LABOR CODE §406.096, contractors may obtain alternative form of worker accident insurance with minimum limits of liability of $100,000 per claim.

INSTRUCTIONS TO BIDDERS (Continued):

Minimum Insurance Requirements	
Type of Coverage	**Limits of Liability**
Worker's Compensation	Statutory Coverage
Comprehensive General Liability (City named as additional insured) Bodily Injury	$250,000 each person/$500,000 each occurrence
Property Damage	$100,000 each occurrence/$100,000 aggregate or $500,000 combined single limits

The following insurance requirements will be included in all City contracts of $15,000 or more.

(1) The successful bidder will be required to carry the following insurance coverage and limits of coverage, as well as list the City as an additional insured to liability coverage as requested by the City. In addition, the successful bidder shall provide the City with evidence of coverage and furnish acceptable proof of payment of insurance premiums.

(2) The successful bidder will be required to secure and/or have insurance coverage in force with an admitted property and casualty insurance company licensed by the State of Texas to conduct business in the State of Texas.

(3) In contracts not involving building and construction projects, as that activity is defined in TEX. LABOR CODE §406.096, contractors may obtain alternative form of worker accident insurance with minimum limits of liability of $100,000 per claim.

INSTRUCTIONS TO BIDDERS (Continued):

Minimum Insurance Requirements	
Type of Coverage	**Limits of Liability**
Worker's Compensation	Statutory Coverage
Employer's Liability	Bodily Injury by Accident: $100,000 each accident Bodily Injury by Disease: $100,000 each employee/$500,000 policy limit
Comprehensive General Liability Bodily Injury Property Damage	 $250,000 each person/$500,000 each occurrence $100,000 each occurrence/$100,000 aggregate or $500,000 combined single limits
Comprehensive Auto Liability Bodily Injury Property Damage	 $100,000 each person/$500,000 each occurrence $100,000 each occurrence/$100,000 aggregate or $500,000 combined single limits
City's Protective Liability Bodily Injury Property Damage	 $250,000 each person/$500,000 each occurrence $100,000 each occurrence/$100,000 aggregate or $500,000 combined single limits

CITY OF EDINBURG
REQUEST FOR BIDS FOR
LIFT STATION FENCE PROJECT

BID NO. 2012-37

BID OPENING DATE: January 23, 2012 at 3:00 p.m.

You are invited to submit a sealed bid for the **LIFT STATION FENCE PROJECT** as requested by the City of Edinburg Utilities Department. The City of Edinburg Utilities Department is seeking bids from qualified local or area companies/firms for the labor and material needed to install permanent fencing along the boundaries of lift stations located in Edinburg, Texas. The specifications listed below are minimum requirements and are intended to govern, in general, the size and material desired. The City of Edinburg reserves the right to evaluate variations from these specifications.

GENERAL REQUIREMENTS AND SPECIFICATIONS FOR THE LIFT STATION FENCE PROJECT:

(SEE PAGE 11)

CITY OF EDINBURG
Wastewater Treatment Plant - Lift Station Fence Project
SPECIFICATIONS

This section covers the requirements for the permanent fencing along the boundaries of the lift stations. The project consists of removing existing fence and installing eight (8) foot cedar fence using wood screws.

BASE BID:

- Contractor will be responsible for the disposal of existing fence materials to be removed.
- Slats shall be eight (8) inches high western red cedar.
- All railings and slats shall be fastened using two (2) 1½" Wood Screws at each railing and slat.
- All 2 x 4 and 4 x 4 shall be treated wood.
- Corner, gate, end or line post shall be set true to line and grade in concrete bases 28" deep.
- Fence shall have three (3) rails spaced evenly for support (top, middle, and bottom).
- The maximum distance between posts shall not exceed seven (7) feet.
- The slats shall be spaced one inch above ground level, on a straight grade between posts and spaced ½" between each slat.
- Must have twelve (12) foot double drive gate heavy duty galvanized poles (posts) reinforced proper hardware (bolts), **see attached picture, Exhibit "A".**
- Any and all material to be used for the project shall be sound and free from all decay, splits, multiple cracks, or any other defect which would weaken the posts or otherwise cause them to be structurally unsuitable for the purpose intended.

ALTERNATE BID:

- This section covers the installation/addition of three (3) strand barb wire at two Lift Stations with existing fence.
- The barb wire shall be stretched and fastened to existing perimeter fence.
- The total cost shall include material and installation of barb wire.

All material and labor will have one (1) year warranty

CITY OF EDINBURG
BID FORM FOR
LIFT STATION FENCE PROJECT

BID NO. 2012-37

BID OPENING DATE: January 23, 2012 at 3:00 p.m.

I/We submit the following bid in **ORIGINAL FORM** for **PURCHASE OF LIFT STATION FENCE PROJECT** according to City of Edinburg requirements, less tax:

NOTE: In addition to responding to our "local" solicitation for bids/proposals vendors/contractors are encouraged to provide pricing on the above referenced items/products/services based on Buyboard, H-GAC, TXMAS and/or any other State of Texas recognized and approved cooperative which has complied with the bidding requirements for the State of Texas (any and all applicable fees must be included). All cooperative pricing must be submitted on or before bid/proposal opening date and hour.

CHECK ONE

☐ **BUYBOARD** ☐ **H-GAC** ☐ **TXMAS** ☐ **DEALER/LOCAL**
☐ **TX DIR** ☐ **TFC** ☐ **OTHER** _____
Specify

CONTRACT NUMBER: _____ (if applicable) COMMODITY NUMBER: _____ (if applicable)

ITEM	QUANTITY	DESCRIPTION	AMOUNT
		BASE BID	
1	1	LIFT STATION NO. 3	$_____
2	1	LIFT STATION NO. 4	$_____
3	1	LIFT STATION NO. 9	$_____
4	1	LIFT STATION NO. 13	$_____
5	1	LIFT STATION NO. 22	$_____
6	1	LIFT STATION NO. 23	$_____
7	1	LIFT STATION NO. 33	$_____

BID FORM FOR PURCHASE OF LIFT STATION FENCE PROJECT (Continued):

ITEM	QUANTITY	DESCRIPTION	AMOUNT
		TOTAL BASE BIDS (LINE ITEMS 1-7)	$_____
		ALTERNATE BID	
8	1	LIFT STATION NO. 2	$_____
9	1	LIFT STATION NO. 18	$_____
		TOTAL ALTERNATE BIDS (LINE ITEMS 8-9)	$_____
		TOTAL BASE & ALTERNATE BIDS (LINE ITEMS 1-9)	$_____

All Addenda issued in respect to this project shall be considered official changes to the original bidding documents. It shall be the Bidder(s) responsibility to ensure that all Addenda have been received. Furthermore, bidders are advised that they must recognize, comply with, and attach a signed copy of each Addendum which shall be made part of their Bid Submittal. Bidder(s) signature on Addenda shall be interpreted as the vendor's "recognition and compliance to" official changes as outlined by the City of Edinburg and as such are made part of the original bidding documents.

Respectfully submitted this _____ day of _____, 2012.

SIGNATURE: _____

TYPE/PRINT NAME: _____

TITLE: _____

COMPANY: _____

ADDRESS: _____

_____

TELEPHONE NO.: _____

FAX NO.: _____

EMAIL: _____

Item No. 1 - Lift Station # 3 Addr : Sprague & Jackson SE

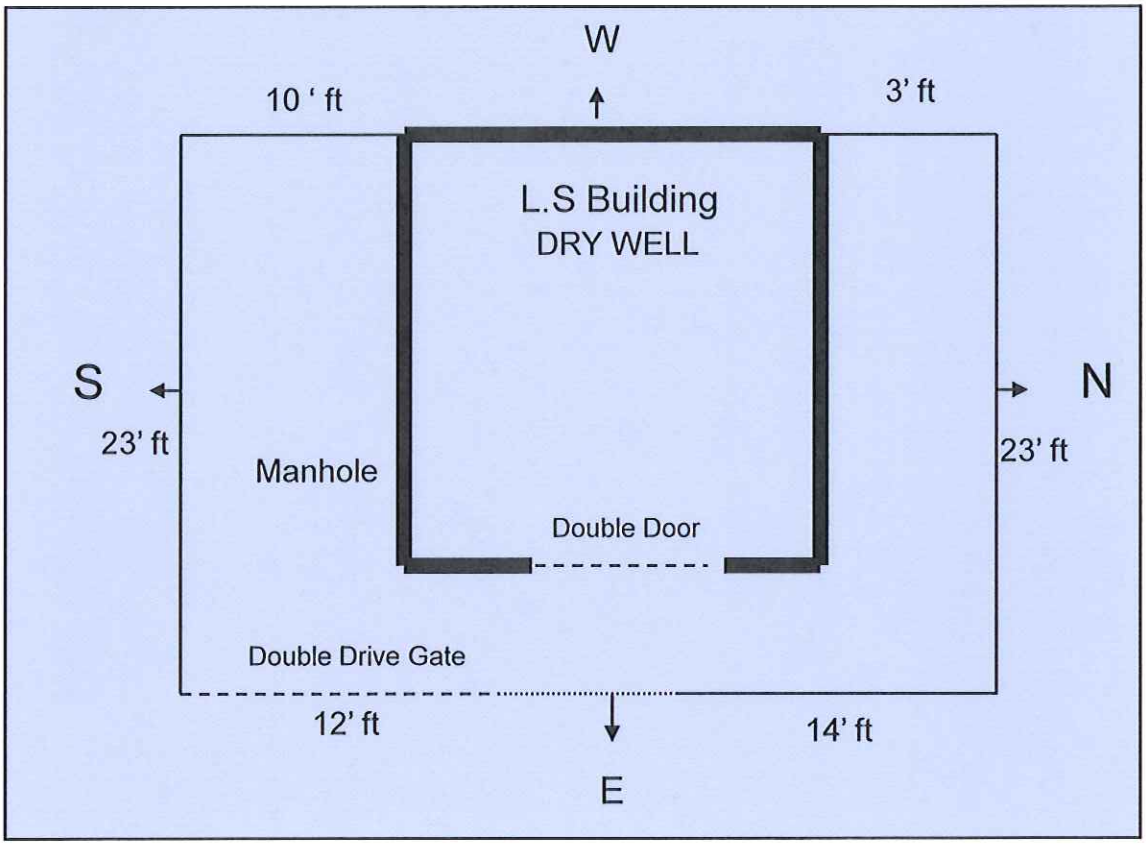

Item No. 2 - Lift Station # 4

1600 N.Sugar Rd & (Chapin & Russell)

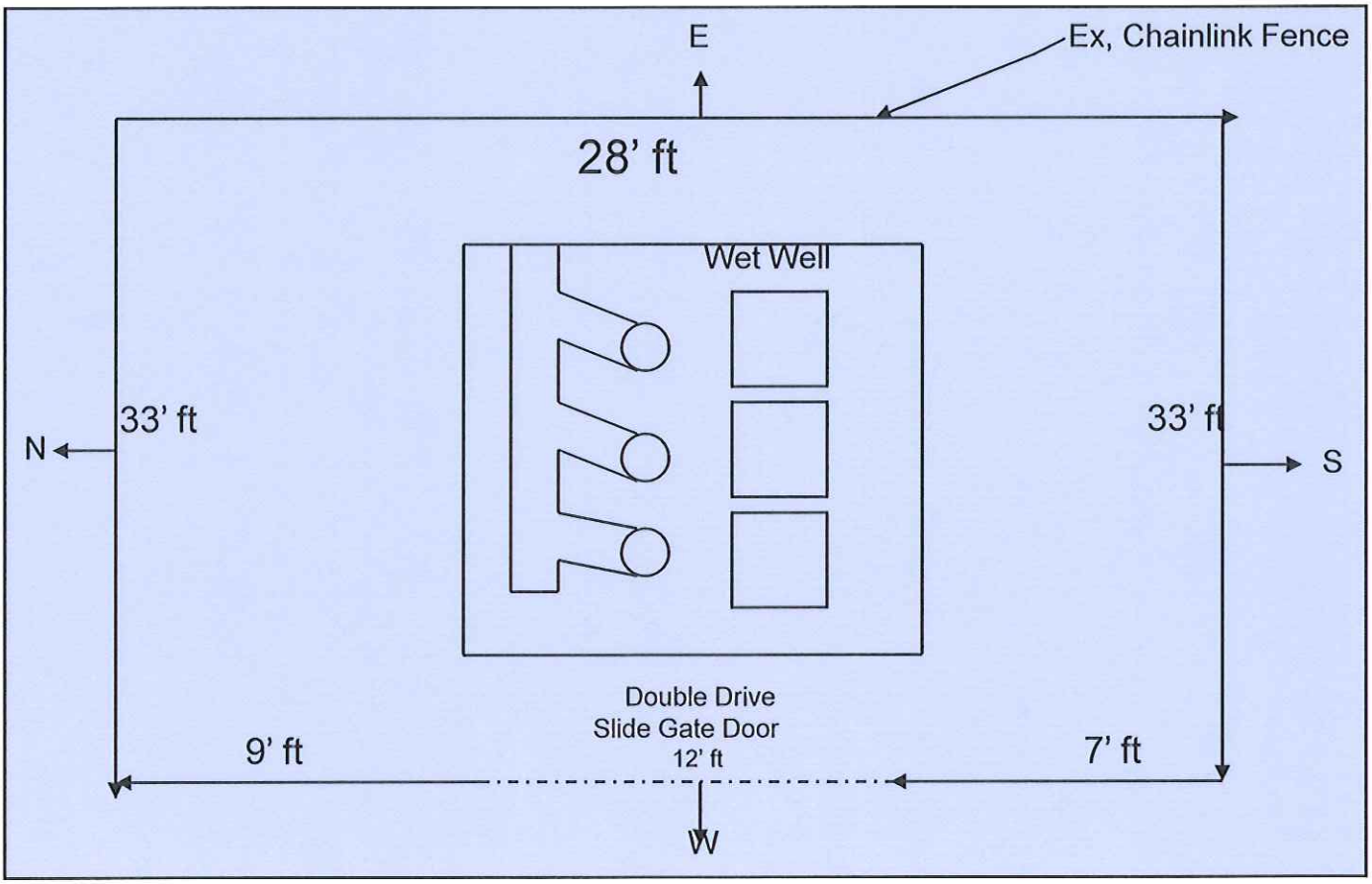

Item No. 3 - Lift Station # 9 Addr: 1803 S. Sugar Rd & John Ave, (Railroad)

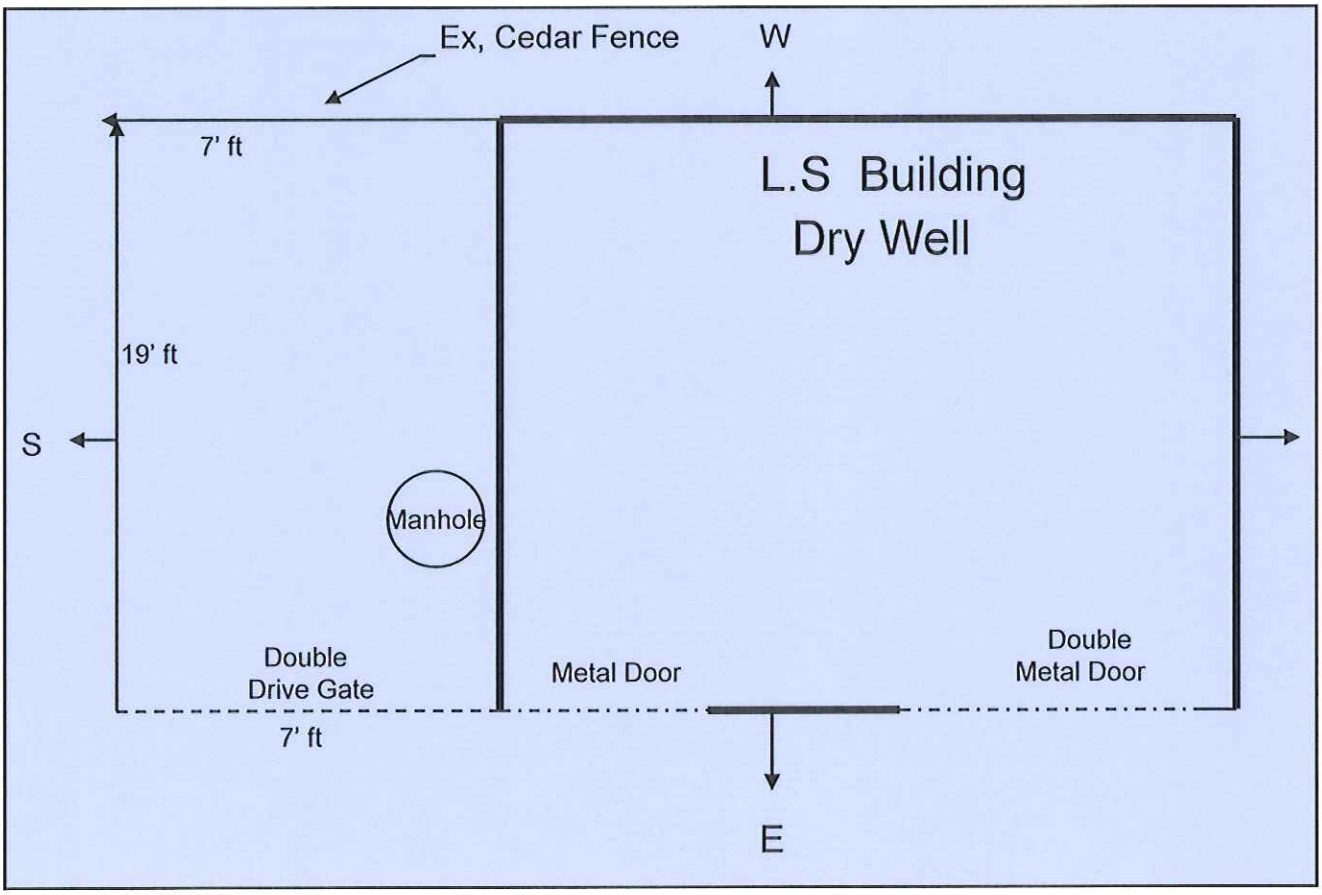

Item No. 4 - Lift Station # 13 Addr : 1300 S. 25th & N. Hwy 281 Frontage Rd.

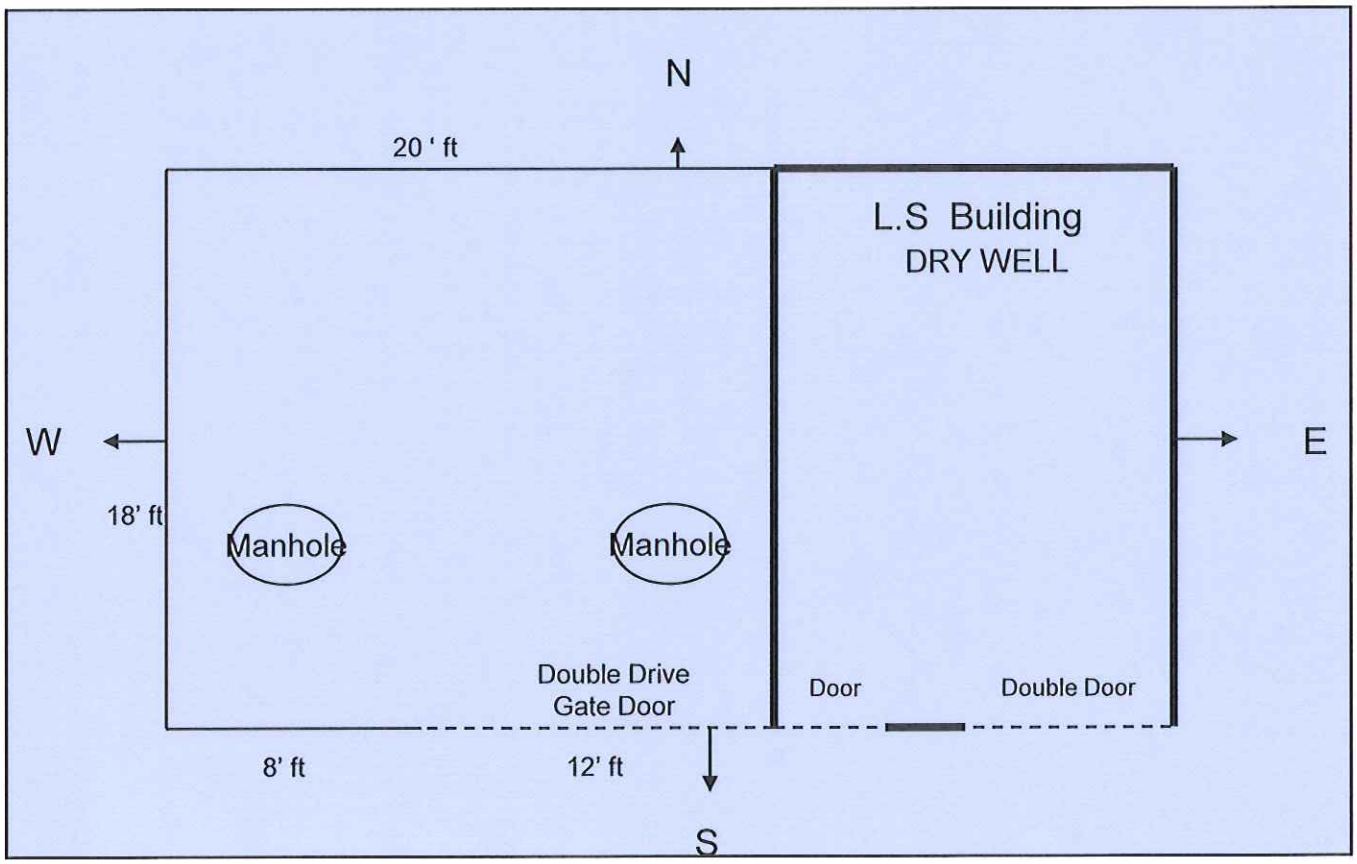

Item No. 5 - Lift Station # 22 Addr: 3201 S. Sugar Rd & Gloria Rd

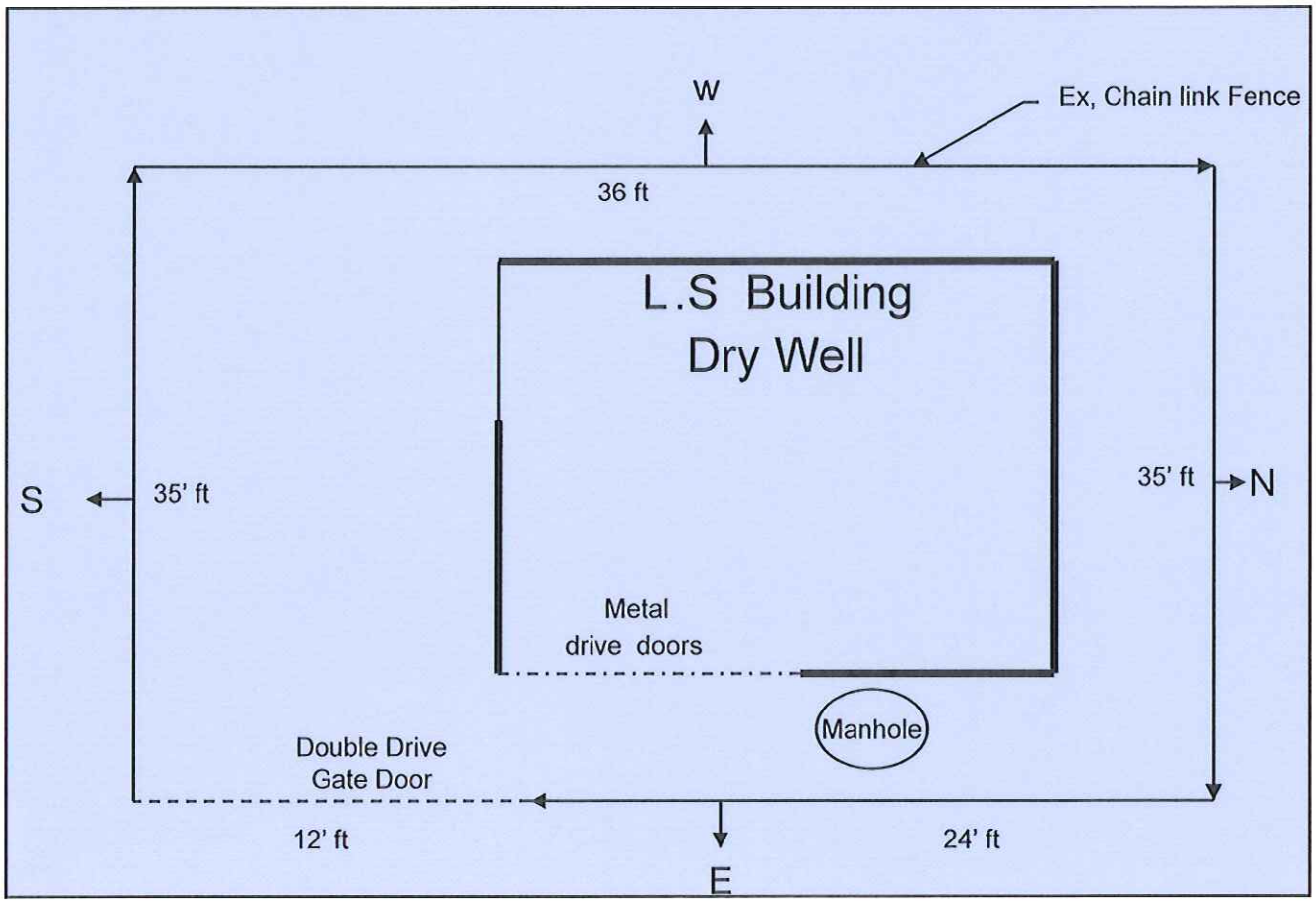

Item No. 6 - Lift Station # 23 124 E. Alberta Rd & S. Closner

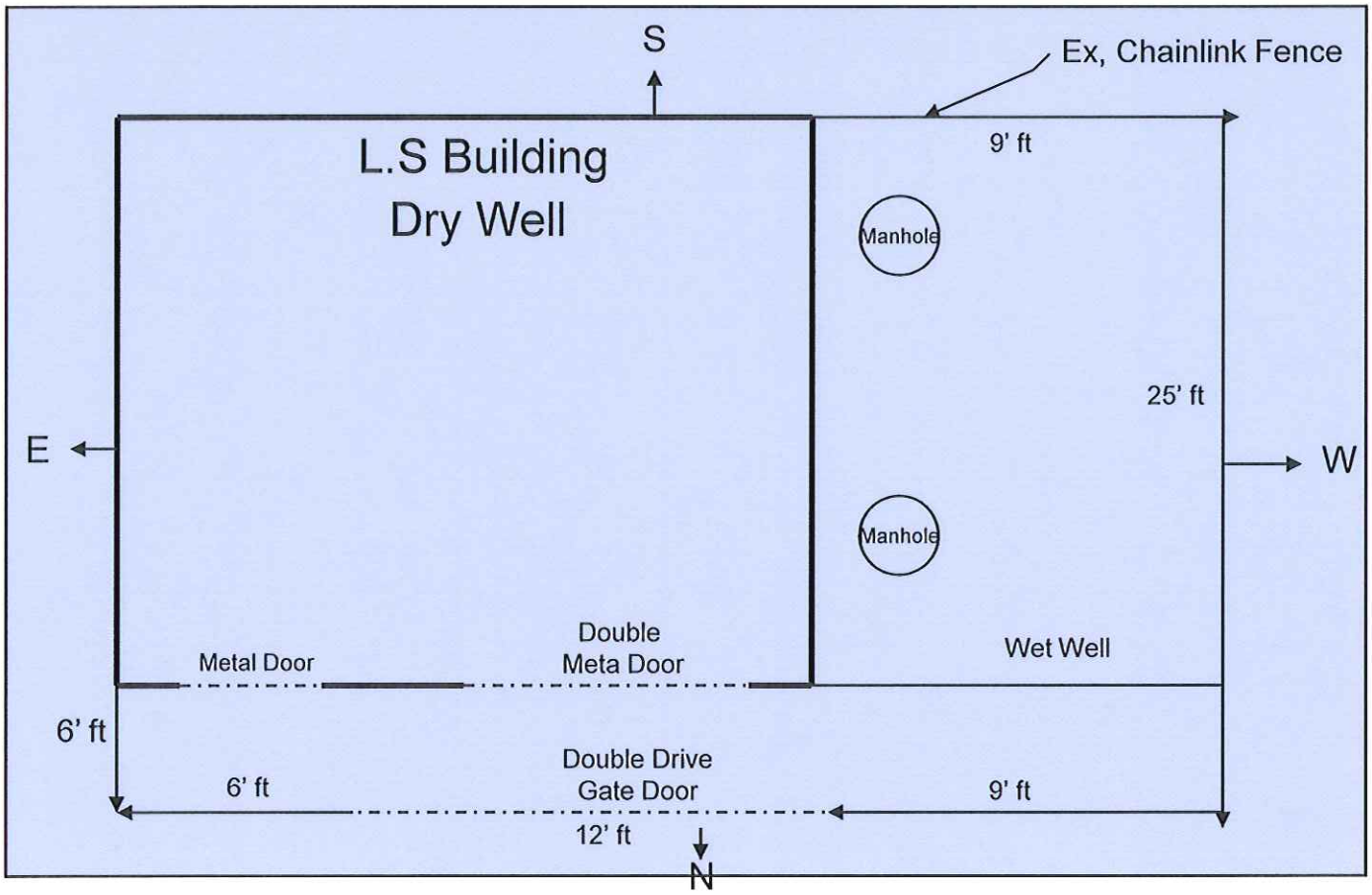

Item No. 7 - Lift Station # 33

2250 E. Rogers & N. " M" Rd

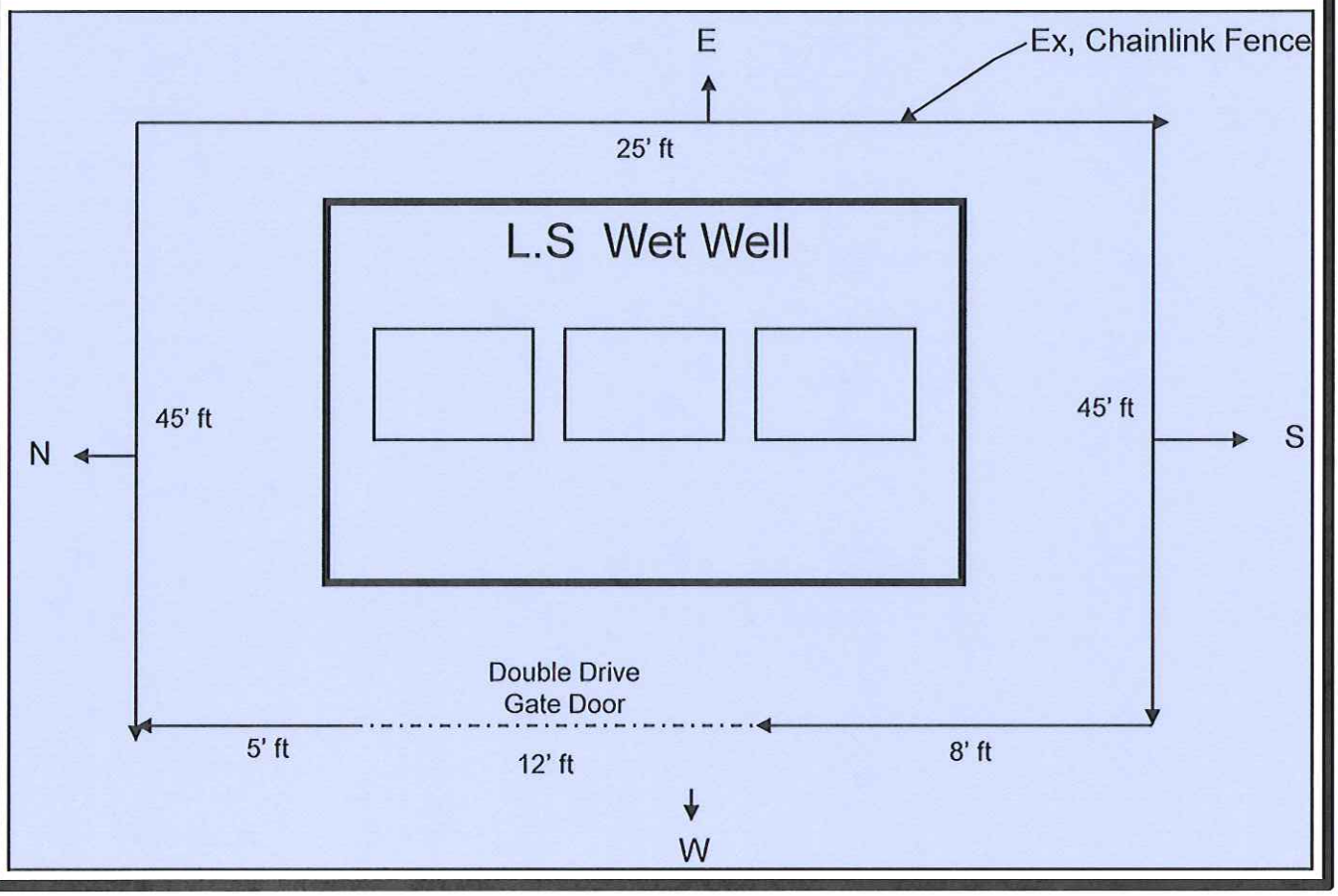

Item No. 8 - Lift Station # 2

200 W Chapin Rd & N. Closner

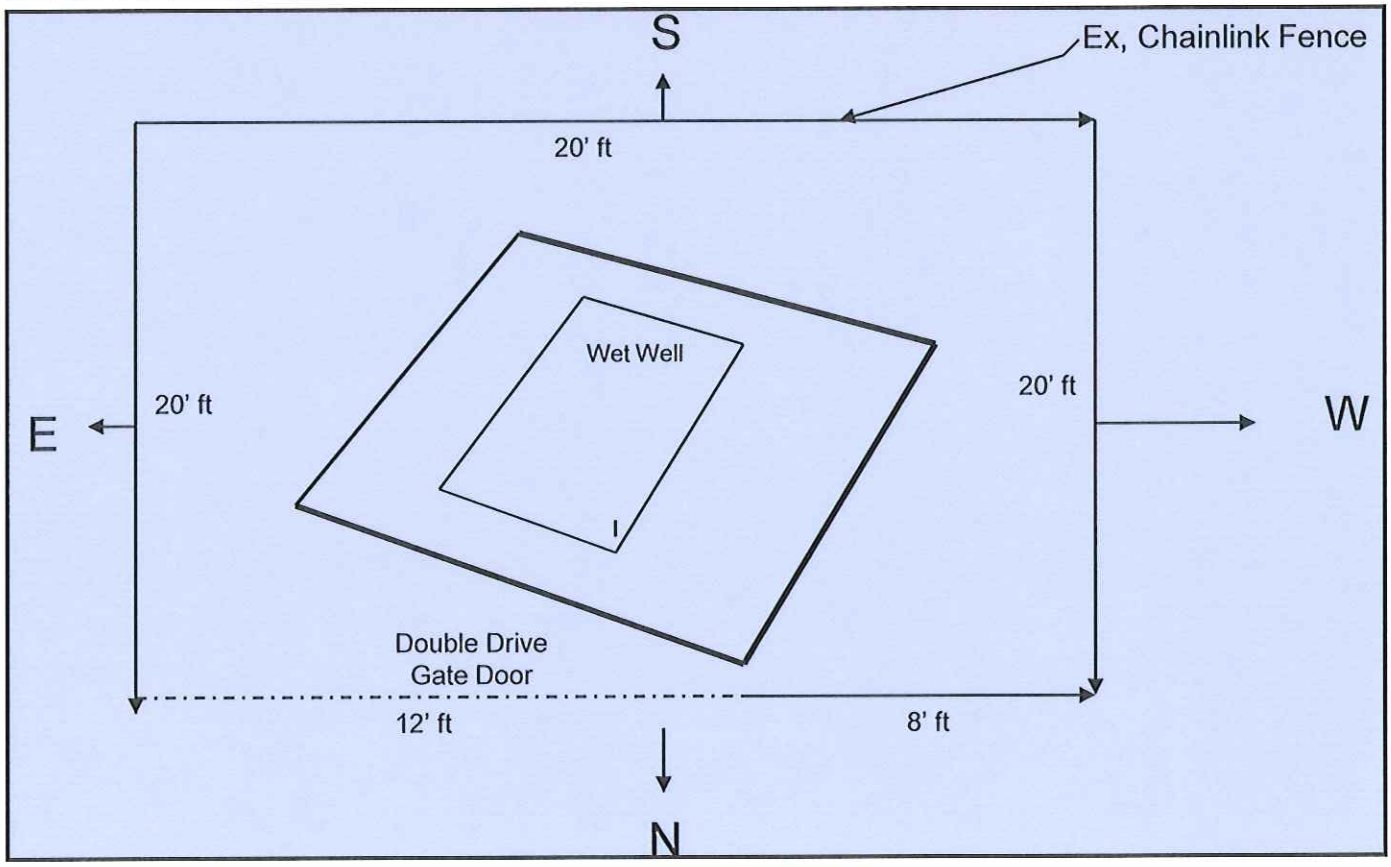

Item No. 9 - Lift Station # 18

Addr, 3100 S. Closner

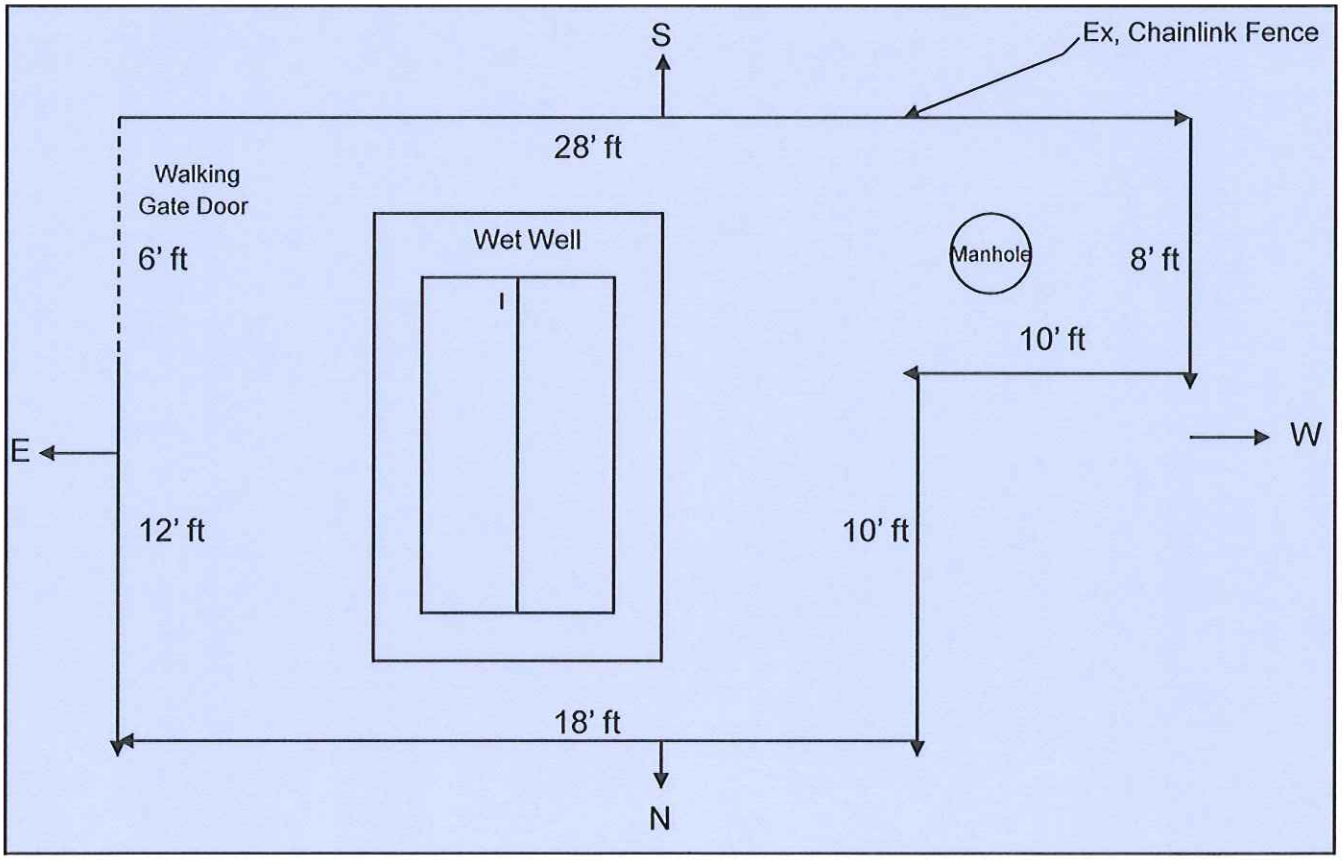

EXHIBIT "A" - SAMPLE 0F DOUBLE GATES

***NOTE: Gate corner pole must be secured to the 4x4 corner post of the fence and secured with cement, where there is no cement drive way.**