THE CITY OF EDINBURG

NOTICE TO BIDDERS

The City of Edinburg is soliciting sealed bids to be received by the City Secretary's Office located at 415 W. University Drive, Edinburg, Texas 78541. City of Edinburg normal business days are Monday through Friday between the hours of 8:00 a.m. to 5:00 p.m. and shall be closed on recognized holidays.

Bids will be received until **3:00 p.m. Central Time**, on **Monday, December 03 , 2012**, shortly thereafter all submitted bids will be gathered and taken to the Edinburg City Hall Community Room, 1st Floor, to be publicly opened and read aloud. Any bid received after the closing time will not be accepted and will be returned to the bidder unopened. It is the responsibility of the bidder to see that any bid submitted shall have sufficient time to be received by the City Secretary's Office prior to the bid opening date and time. The receiving time in the City Secretary's Office will be the governing time for acceptability of the bids. Bids will not be accepted by telephone or facsimile machine. All bids must bear original signatures and figures. The Bid shall be for:

BID NO. 2013-39
REPLACEMENT OF LIFT STATION PUMPS

Bidders receiving a "NOTICE TO BIDDERS" and/or "REQUEST FOR PROPOSALS" notice in the mail or reading same in the newspaper are advised that the bidding documents can be downloaded from the City of Edinburg web page address: www.cityofedinburg.com, or may obtain copies of same by contacting the office of:

LORENA FUENTES, PURCHASING AGENT, LOCATED AT 415 W. UNIVERSITY DRIVE, Edinburg, TX 78541 by calling (956) 388-8972 or by e-mailing your request to the following e-mail address: lfuentes@cityofedinburg.com .

If you have any questions or require additional information regarding this bid, please contact Mr. Jose Anguiano, Waste Water Treatment Plant Superintendent, at (956) 292-2045.

If Hand-delivering Bids: 415 West University Drive,
c/o City Secretary Department (1st Floor)

If using Land Courier (i.e., FedEx, UPS): City of Edinburg
c/o City Secretary
415 West University Drive
Edinburg, Texas 78541

If Mailing Bids: City of Edinburg
c/o City Secretary
P.O. Box 1079
Edinburg, TX 78540-1079

The City of Edinburg reserves the right to refuse and reject any or all bids and to waive any or all formalities or technicalities and to accept the bid deemed most advantageous to the City, and hold the bids for a period of **60** days without taking action.

Bids must be submitted in an envelope sealed with tape and prominently marked on the lower left hand corner of the bid envelope with corresponding bid number and title.

CITY OF EDINBURG
INSTRUCTIONS TO BIDDERS

DEVIATION FROM SPECIFICATION

Please read your specifications/requirements thoroughly and be sure that the SERVICES offered comply with all specifications/requirements. Any variation from the specifications/requirements must be clearly indicated by letter attached to your bid referencing variations on a point-by-point basis. If no exceptions are noted, and you are the successful bidder, it will be required that the SERVICES be provided as specified.

PURPOSE

1. The purpose of these specifications/requirements and bidding documents is for the purchase of **REPLACEMENT OF LIFT STATION PUMPS** for the City of Edinburg.

2. The SERVICES to be furnished under this bid shall be as specified in these bid documents. All specifications/requirements shown are minimum. There is no intention to disqualify any bidder who can meet these specifications/requirements.

SUBMITTAL OF BID

Bids will be submitted in sealed envelopes upon the blank bid form attached hereto. Each bid must be completely filled out and **SUBMITTED IN ORIGINAL FORM**, complete with all supporting documentation. Bids submitted by facsimile (fax) or electronically will **NOT** be accepted. Submittal of a bid in response to this solicitation for Bids constitutes an offer by the Bidder. Bids which do not comply with these specifications/requirements may be rejected at the option of the City. Bids must be filed with the City of Edinburg, before opening day and hour. No late Bids will be accepted. They will be returned to Bidder unopened (if properly identified).

If Hand-delivering Bids:	415 West University Drive, c/o City Secretary Department (1st Floor)
If using Land Courier (i.e., FedEx, UPS):	415 West University Drive, c/o City Secretary Department (1st Floor), Edinburg, Texas 78541
If Mailing Bids:	P.O. Box 1079, Edinburg, TX 78540-1079

A pre-bid conference will be held at **10:00 a.m., Monday, November 26, 2012** at the Edinburg City Hall Community Room, 1st Floor, located at 415 W. University Drive, Edinburg, Texas. All prospective bidders are encouraged to attend.

PREPARATION OF BID

Bids MUST give full firm name and address of bidder, and be manually signed. Failure to do so will disqualify your bid. Person signing bid must show title or AUTHORITY TO BIND HIS/HER FIRM IN A CONTRACT.

Firm name and authorized signature must appear on each page that calls for this information. The legal status of the Respondent/Bidder whether corporation, partnership, or individual, shall also be stated in the bid. A corporation shall execute the bid by its duly authorized officers in accordance with its corporate by-laws and shall also list the state in which it is incorporated. A partnership Respondent/Bidder shall give full names and addresses of all partners. All partners shall execute the bid. Partnership and Individual Respondent/Bidder shall state in the bid the names and addresses of all persons with a vested interest therein. The place of residence of each Respondent/Bidder, or the office address in the case of a firm or company, with county and state and telephone number, shall be given after the signature.

ALTERATIONS/AMENDMENTS TO BID

Bids **CANNOT** be altered or amended after opening time. Alterations made before opening time must be initialed by

INSTRUCTIONS TO BIDDERS (Continued):

bidder guaranteeing authenticity. No bid may be withdrawn after opening time without acceptable reason in writing and only after approval by the City of Edinburg.

SALES TAX
State sales tax must not be included in the bid.

SUBSTITUTIONS
No substitutions or cancellations will be permitted without written approval of City of Edinburg.

NO BID RESPONSE
If unable to submit a bid, bidder should return inquiry giving reasons.

EXCEPTIONS
Any additions, deletions, or variations from the following specifications/requirements must be noted. The bidder shall attach to his/her bid sheet a list of any exceptions to the specifications/requirements if unable to do so, on specification sheet.

BRAND OR MANUFACTURER REFERENCE
Unless otherwise specified, any catalog or manufacturer's reference or brand name used in describing an item is merely descriptive, and not restrictive, and is used only to indicate type and style of product desired. Bids on alternate brands will be considered if they meet specification requirements. If a bidder quotes on equipment other than the one(s) specified in the bid, sufficient specifications and descriptive (pictured literature) data must accompany same to permit thorough evaluation. In the absence of these qualifications, he/she will be expected to furnish the product called for.

DELIVERY
Number of days required to deliver SERVICES after receiving order must be stated in the bid. Failure to so state will obligate bidder to complete service delivery within ONE day.

DELAY IN SERVICE DELIVERY
When delay can be foreseen, Bidder shall give prior notice to City of Edinburg. Bidder must keep City of Edinburg advised at all times of status of order. Default in promised service delivery (without acceptable reasons) or failure to meet specifications/requirements, authorizes the City of Edinburg to purchase such SERVICES elsewhere and charge increase in cost to defaulting vendor. Acceptable reasons for delayed delivery are as follows: Acts of God (floods, tornadoes, hurricanes, etc.), acts of government, fire, strikes, war; Actions beyond the control of the successful bidder.

SERVICE DELIVERED PRICING
Bids in units of quantity specified - extend and show total. In the event of discrepancies in extension, unit prices will govern. Bids subject to unlimited price increase will not be considered.

VALID BID TIME FRAME
The City may hold bids 60 days after bid opening without taking action. BIDDERS shall be required to hold their Bids firm for the same period of time.

RIGHT TO REJECT/AWARD
The City of Edinburg reserves the right to refuse and reject any or all Bids, and to waive any or all formalities or

INSTRUCTIONS TO BIDDERS (Continued):

technicalities, and to make such awards of contract as may be deemed to be the best and most advantageous to the City of Edinburg.

MULTIPLE VENDOR CONTRACTS

Bidders are advised that the City of Edinburg may award Service Contracts to multiple vendors based on low bid per item basis. All items specified on the "Bid Form" **must** reflect the individual unit prices. The City of Edinburg reserves the right to award all items individually or in any combination thereof.

INDEMNIFICATION CLAUSE

The Bidder agrees to indemnify and save harmless the City, from all suits and actions of every nature and description brought against them or any of them, for or on account of the use of patented appliances, products or processes, and he shall pay all royalties and charges which are legal and equitable. Evidence of such payment or satisfaction shall be submitted upon request of the Purchasing Agent, as a necessary requirement in connection with the final estimate for payment in which such patented appliance, products or processes are used.

ADDENDA

Bidder shall carefully examine the bid forms, specifications/requirements, and instructions to Bidders. Should the bidder find discrepancies in, or omissions from bid forms, specifications/requirements, or other documents, or should he/she be in doubt as to their meaning, he/she should at once notify the Purchasing Agent (Edinburg City Hall, 956-388-8972) and obtain clarification by addendum prior to submitting any bid. Explanations, interpretations, and supplemental instructions shall be in the form of written Addenda which shall become a part of the Contract documents. Said Addenda shall be mailed, e-mailed, hand delivered and/or faxed, to all prospective Bidders. All Addenda issued in respect to this project shall be considered official changes to the original bid documents. Verbal statements in response to inquiries and/or requests for explanations shall not be authoritative nor binding. It shall be the Bidder(s) responsibility to ensure that they have received all Addenda in respect to this project. Furthermore, Bidders are advised that they must recognize, comply with, and attach a signed copy of each Addendum which shall be made part of their Bid Submittal. Bidder(s) signature on Addenda shall be interpreted as the bidder's "recognition and compliance to" official changes as outlined by the City of Edinburg and as such are made part of the original solicitation documents. Failure of any bidder to receive any such addendum or interpretation shall not relieve such Bidder from its terms and requirements. Addendums are available online at www.cityofedinburg.com.

PAYMENT

The City of Edinburg will execute payment by mail in accordance with the State of Texas Pay Law after SERVICES have been provided and invoiced. No other method of payment will be considered.

SYNONYM

Where in this bid package ITEMS OR SERVICES is used its meaning shall refer to the REPLACEMENT OF LIFT STATION PUMPS as specified.

ASSIGNMENT

Neither the Bidder's contract nor payment due to an awarded vendor may be assigned to a third party without the written approval of the Purchasing Department for the City of Edinburg.

INTERPRETATIONS

Any questions concerning the conditions and/or specifications/requirements with regards to this solicitation for Bids shall be directed to the designated individuals as outlined in the Request for Bids. Such interpretations, which may

INSTRUCTIONS TO BIDDERS (Continued):

affect the eventual outcome of this request for Bids, shall be furnished in writing to all prospective Bidders via Addendum. No interpretation shall be considered binding unless provided in writing by the City of Edinburg in accordance with paragraph entitled "Addenda".

STATUTORY REQUIREMENTS

It shall be the responsibility of the successful Bidder to comply with all applicable State & Federal laws, Executive Orders and Municipal Ordinances, and the Rules and Regulations of all authorities having jurisdiction over the work to be performed hereunder and such shall apply to the contract throughout, and that they will be deemed to be included in the contract as though written out in full in the contract documents. (To include issues related to health, environmental, and safety to name a few.)

BIDDER'S EMPLOYEES

Neither the Bidder nor his/her employees engaged in fulfilling the terms and conditions of this Purchase Contract shall be considered employees of the City. The method and manner of performance of such undertakings shall be under the exclusive control of the vendor on contract. The City shall have the right of inspection of said undertakings at any time.

RIGHT TO WAIVE

City of Edinburg reserves the right to waive or take exception to any part of these specifications/requirements when in the best interest of the City of Edinburg.

COOPERATIVE PRICING

Bidders are advised that in addition to responding to our "local" solicitation for bids/Bids with Dealer pricing, vendors/contractors are encouraged to provide pricing on the below referenced items/products/services based on BuyBoard, TX-MAS, H-GAC and/or any other State of Texas recognized and approved cooperative which has complied with the bidding requirements for the State of Texas. If bidding other than or in addition to "dealer" pricing, kindly duplicate the bid forms for each bid being provided from a cooperative contract. Any and all applicable fees must be included. All cooperative pricing must be submitted on or before bid opening date and hour.

TIME ALLOWED FOR ACTION TAKEN

The City of Edinburg may hold bids **60** days after the opening of Bids without taking action. Bidders are required to hold their Bids firm for same period of time.

PREPARATION OF BID

The City of Edinburg shall not be held liable for any costs incurred by any bidder for work performed in the preparation of and production of a bid or for any work performed prior to execution of contract.

CONFIDENTIAL INFORMATION

Any information deemed to be confidential by the bidder should be clearly noted on the pages where confidential information is contained; however, the City cannot guarantee that it will not be compelled to disclose all or part of any public record under Texas Public Information Act, since information deemed to be confidential by the bidder may not be considered confidential under Texas Law, or pursuant to a Court order.

VERBAL THREATS

Any threats made to any employee of the City, be it verbal or written, to discontinue the providing of item/material/services for whatever reason and/or reasons shall be considered a breach of contract and the City will immediately sever the contract with the Vendor on contract.

INSTRUCTIONS TO BIDDERS (Continued):

MATHEMATICAL ERRORS
In the event that mathematical errors exist in any bid, unit prices/rates -v- totals, unit prices/rates will govern.

AUDIT
The City of Edinburg reserves the right to audit the vendor's books and records relating to the performance of this contract. The City of Edinburg, at its own expense, shall have the right at all reasonable times during normal business hours and upon at least twenty-four (24) hours' advance notice, to audit, to examine, and to make copies of or extracts from the books of account and records maintained by the vendor(s) with respect to the Supply/Service and/or Purchase Contract. If such audit shall disclose overpayment by City to vendor, written notice of such overpayment shall be provided to the vendor and the amount of overpayment shall be promptly reimbursed by vendor to the City. In the event any such overpayment is not paid within ten (10) business days after receipt of such notice, the unpaid amount of such overpayment shall bear interest at the rate of one percent (1%) per month from the date of such notice until paid.

PAST PERFORMANCE
Vendor's past performance shall be taken into consideration in the evaluation and award of Service Contract for the Purchase of SERVICES.

JURISDICTION
Contract(s) executed as part of this solicitation shall be subject to and governed under the laws of the State of Texas. Any and all obligations and payments are due and performable and payable in Hidalgo County, Texas.

VENUE
The parties agree that venue for purposes of any and all lawsuits, cause of action, arbitration, and/or any other dispute(s) shall be in Hidalgo County, Texas.

CONFLICT OF INTEREST
CHAPTER 176 OF THE TEXAS LOCAL GOVERNMENT CODE
Effective January 1, 2006, Chapter 176 of the Texas Local Government Code requires that any vendor or person considering doing business with a local government entity disclose in the Questionnaire Form CIQ, the vendor or person's affiliation or business relationship that might cause a conflict of interest with a local government entity. By law, this questionnaire must be filed with the records administrator of the City of Edinburg not later than the 7th business day after the date the person becomes aware of facts that require the statement be filed. See Section 176.006, Local Government Code. A person commits an offense if the person violates Section 176.006, Local Government Code. An offense under this section is a Class C misdemeanor. For more information or to obtain Questionnaire CIQ go to the Texas Ethics Commission web page at www.ethics.state.tx.us/forms/CIQ.pdf.

IF YOU HAVE ANY QUESTIONS ABOUT COMPLIANCE, PLEASE CONSULT YOUR OWN LEGAL COUNSEL. COMPLIANCE IS THE INDIVIDUAL RESPONSIBILITY OF EACH PERSON OR AGENT OF A PERSON WHO IS SUBJECT TO THE FILING REQUIREMENT. AN OFFENSE UNDER CHAPTER 176 IS A CLASS "C" MISDEMEANOR.

AWARD
For purposes of this project, award will be contingent on approval of budget.

SPECIAL CIRCUMSTANCES
In the event that the City of Edinburg has an immediate need for a particular service(s) that is/are on contract and the

INSTRUCTIONS TO BIDDERS (Continued):

successful vendor on contract is not able to meet the special service delivery needs of the City of Edinburg, the City of Edinburg reserves the right to purchase such services elsewhere to fulfill its' immediate need.

TERMINATION OF CONTRACT

The City of Edinburg reserves the right to terminate the contract if, in the opinion of the City of Edinburg, the successful vendor's performance is not acceptable, if the City is being repeatedly over charged, improperly charged, no funds are available, or if the City wishes, without cause, to discontinue this contract. Termination will be in written form allowing a 30-day notice. The bidder shall be afforded the same right to terminate this contract in the same manner.

INSURANCE REQUIREMENTS

Staff may waive insurance requirements for contracts $0 - $4,999.99, including but not limited to contracts for food, materials, supplies, and construction. Workers' Compensation in amounts which satisfy statutory coverage shall be required for construction projects.

The following insurance requirements will be included in all City contracts of $5,000 - $14,999.99. In contracts not involving building and construction projects, as that activity is defined in TEX. LABOR CODE §406.096, contractors may obtain alternative form of worker accident insurance with minimum limits of liability of $100,000 per claim.

Minimum Insurance Requirements	
Type of Coverage	**Limits of Liability**
Worker's Compensation	Statutory Coverage
Comprehensive General Liability (City named as additional insured) Bodily Injury	$250,000 each person/$500,000 each occurrence
Property Damage	$100,000 each occurrence/$100,000 aggregate or $500,000 combined single limits

The following insurance requirements will be included in all City contracts of $15,000 or more.

(1) The successful bidder will be required to carry the following insurance coverage and limits of coverage, as well as list the City as an additional insured to liability coverage as requested by the City. In addition, the successful bidder shall provide the City with evidence of coverage and furnish acceptable proof of payment of insurance premiums.

(2) The successful bidder will be required to secure and/or have insurance coverage in force with an admitted property and casualty insurance company licensed by the State of Texas to conduct business in the State of Texas.

(3) In contracts not involving building and construction projects, as that activity is defined in TEX. LABOR CODE §406.096, contractors may obtain alternative form of worker accident insurance with minimum limits of liability of $100,000 per claim.

INSTRUCTIONS TO BIDDERS (Continued):

Minimum Insurance Requirements	
Type of Coverage	**Limits of Liability**
Worker's Compensation	Statutory Coverage
Employer's Liability	Bodily Injury by Accident: $100,000 each accident Bodily Injury by Disease: $100,000 each employee/$500,000 policy limit
Comprehensive General Liability Bodily Injury Property Damage	 $250,000 each person/$500,000 each occurrence $100,000 each occurrence/$100,000 aggregate or $500,000 combined single limits
Comprehensive Auto Liability Bodily Injury Property Damage	 $100,000 each person/$500,000 each occurrence $100,000 each occurrence/$100,000 aggregate or $500,000 combined single limits
City's Protective Liability Bodily Injury Property Damage	 $250,000 each person/$500,000 each occurrence $100,000 each occurrence/$100,000 aggregate or $500,000 combined single limits

Policies must name the City of Edinburg as an Additional Insured.
Certificates of insurance naming the CITY as an additional insured shall be submitted to the CITY for approval prior to any services being performed by Contractor. Each policy of insurance required hereunder shall extend for a period equivalent to, or longer than the term of the Contract, and any insurer hereunder shall be required to give at least thirty (30) days written notice to the CITY prior to the cancellation of any such coverage on the termination date, or otherwise. This Contract shall be automatically suspended upon the cancellation, or other termination, of any required policy of insurance hereunder, and such suspension shall continue until evidence that adequate replacement coverage is provided to the CITY. If replacement coverage is not provided within thirty (30) days following suspension of the Contract, the Contract shall automatically terminate.

BID BOND INFORMATION

If the contract amount is over twenty-five-thousand dollars ($25,000) for construction of the project, the successful bidder shall provide a bid guarantee, give a good and sufficient bond in the full amount of the contract price for the faithful performance of such contract, executed by a surety company authorized to do business in the State of Texas, in accordance with Article 5160, Vernon's Texas Civil Statutes, and amendments thereto. A payment bond in the full amount of the contract price to assure payment shall be required by law of all persons supplying labor and material in the execution of the project provided for in the contract documents.

INSTRUCTIONS TO BIDDERS (Continued):

A bid guarantee equivalent to five percent (5%) of the bid price will be required from each bidder. The "bid guarantee" shall consist of a firm commitment, such as a bid bond, certified check or other negotiable instrument accompanying a bid as assurance that the bidder will upon acceptance of his/her bid, execute such contractual documents as may be required within the time specified.

A performance bond on the part of the contractor for one-hundred percent (100%) of the contract price will be required. A "performance bond" is one executed in connection with a contract to secure fulfillment of all the contractor's obligations under such contract.

A payment bond on the part of the contractor for one-hundred percent (100%) of the contract price will be required. A "payment bond" is one executed in connection with a contract to assure payment, as required by law, of all persons supplying labor and material in execution of the work provided for in the contract documents.

CITY OF EDINBURG
REQUEST FOR BIDS FOR
REPLACEMENT OF LIFT STATION PUMPS

BID NO. 2013-39

BID OPENING DATE: December 03, 2012 at 3:00 p.m.

It is the intent of this Request for Bids to describe and ultimately make it possible for the City of Edinburg to purchase the below mentioned **REPLACEMENT OF LIFT STATION PUMPS.**

GENERAL REQUIREMENTS AND AGREEMENT FOR REPLACEMENT OF LIFT STATION PUMPS:

You are invited to submit a sealed bid for the purchase of REPLACEMENT OF LIFT STATION PUMPS as requested by the City of Edinburg Utilities/WWTP Department.

Article I. The specifications listed below are minimum requirements and are intended to govern, in general, the size and material desired. The City of Edinburg reserves the right to evaluate variations from these specifications.

WET PIT SUBMERSIBLE PUMPS FOR WASTEWATER LIFT STATIONS

PART 1. GENERAL

1.01 This specification shall govern for all work necessary for furnishing the submersible pumps for the Lift Station.

1.02 GENERAL DESCRIPTION

The pumps shall be designed for handling a raw unscreened wastewater. The equipment shall be designed or retrofit existing Abs or Ibara guide rails such that the pump unit can be automatically and firmly connected to the discharge piping when lowered into place on a mating discharge connection permanently installed in the wet pit. The pumps should be easily removable from the lift station, without the need for personnel to enter the wet pit, for inspection or maintenance.

1.03 QUALITY ASSURANCE

A. The pumps shall be furnished by a manufacturer engaged in the production of the specific type of pump for a minimum of 10 years. The manufacturer shall have furnished similar pumps for a least 5 other installations in Texas performing similar duty. Each installation shall have performed satisfactorily for at least 5 years and are still in operation.

B. All manufacturer parts and components shall be engineered for long, continuous and uninterrupted service. Provisions shall be made for easy lubrication, adjustment, or replacement of all parts.

C. Where like items are incorporated into equipment systems (i.e. motors, push buttons, etc.) such items must be identical to achieve standardization for appearance, operation, maintenance, spare parts, and service. Corresponding parts of multiple units shall be interchangeable.

D. All stages of the manufacturing process shall be carefully inspected at the factory by factory inspectors who shall use whatever means necessary to assure the proper fit of all field connections and compliance with all material and fabrication requirements of the specifications.

E. The pump, pump monitoring, and level control panel shall be factory wired and assembled. Assembly and wiring shall be to the point where the only field interconnections to numbered terminal blocks are required.

F. It is absolutely imperative that parts be available within 160 miles of the project site for immediate repairs should repairs become necessary. Unless it can be demonstrated that parts and service have been available at a service center within 160 miles of the project site through the same financially sound firm on a continuing basis for at least 10 years, the spare parts listed in these specifications must be furnished with the pumps at no additional cost to the City.

1.04 PERFORMANCE (Operating Conditions) Lift Station No 4 (1 Pump Required)

A.	One pump running duty point	1250 gpm @ 35.3' tdh
B.	Best Efficiency point	1572 gpm @ 29.3' tdh
C.	Min. Shutoff Head	61.0 Ft.
D.	Min. Wire-to-water efficiency	
	1. One pump running duty point	66.7%
	2. Best efficiency point	69.1%
E.	Max. Total Motor Input Power	
	1. One pump running duty point	16.7 HP
	2. Best efficiency point	17.0 HP
F.	Max pump speed	1755 rpm
G.	Max NPSHR	
	1. One pump running duty point	29.2 Feet
	2. Best efficiency point	28.5 Feet
H.	Min. motor rating @ 40 degrees C	20.0 HP
I.	Voltage/Cycle/Phase	460/60/3
J.	Motor design Type	NEMA B
K.	Motor Service Factor	1.15
L.	Motor Insulation	Class H
M.	Max. Motor pole number	4 Pole
N.	Max. Rated current (FLA)	26 Amps
O.	Min. Rated power factor	83%
P.	Max. Locked rotor current	148 Amps
Q.	Max. NEC Code Letter	H
R.	Min. Pump discharge size	8 Inches

1.05 PERFORMANCE (Operating Conditions) Lift Station No 5 (2 Pumps Required)

A.	One pump running duty point	800 gpm @ 25.5' tdh
B.	Best Efficiency point	649 gpm @ 31.4' tdh
C.	Min. Shutoff Head	60.0 Ft.
D.	Min. Wire-to-water efficiency	
	1. One pump running duty point	58.8%
	2. Best efficiency point	60.7%

REQUEST FOR BIDS FOR REPLACEMENT OF LIFT STATION PUMPS (Continued):

E.	Max. Total Motor Input Power	
	1. One pump running duty point	8.8 HP
	2. Best efficiency point	8.51 HP
F.	Max pump speed	1740rpm
G.	Max NPSHR	
	1. One pump running duty point	13.1 Feet
	2. Best efficiency point	12.8 Feet
H.	Min. motor rating @ 40 degrees C	7.5 HP
I.	Voltage/Cycle/Phase	460/60/3
J.	Motor design Type	NEMA B
K.	Motor Service Factor	1.15
L.	Motor Insulation	Class H
M.	Max. Motor pole number	4 Pole
N.	Max. Rated current (FLA)	9.6 Amps
O.	Min. Rated power factor	88%
P.	Max. Locked rotor current	52 Amps
Q.	Max. NEC Code Letter	H
R.	Min. Pump discharge size	6 Inches

1.06 PERFORMANCE (Operating Conditions) Lift Station No 19 (2 Pumps Required)

A.	One pump running duty point	400 gpm @ 56.7' tdh
B.	Best Efficiency point	535 gpm @ 48.7' tdh
C.	Min. Shutoff Head	84.0 Ft.
D.	Min. Wire-to-water efficiency	
	1. One pump running duty point	67%
	2. Best efficiency point	62.4%
E.	Max. Total Motor Input Power	
	1. One pump running duty point	9.5 HP
	2. Best efficiency point	10.6 HP
F.	Max pump speed	1735 rpm
G.	Max NPSHR	
	1. One pump running duty point	12.9 Feet
	2. Best efficiency point	12.7 Feet
H.	Min. motor rating @ 40 degrees C	10.0 HP
I.	Voltage/Cycle/Phase	230/60/3
J.	Motor design Type	NEMA B
K.	Motor Service Factor	1.15
L.	Motor Insulation	Class H
M.	Max. Motor pole number	4 Pole
N.	Max. Rated current (FLA)	13 Amps
O.	Min. Rated power factor	89%
P.	Max. Locked rotor current	64 Amps
Q.	Max. NEC Code Letter	H
R.	Min. Pump discharge size	4 Inches

REQUEST FOR BIDS FOR REPLACEMENT OF LIFT STATION PUMPS (Continued):

1.07 PERFORMANCE (Operating Conditions) Lift Station No 28 (2 Pumps Required)

A.	One pump running duty point	600 gpm @ 19.3' tdh
B.	Best Efficiency point	432 gpm @ 27.8' tdh
C.	Min. Shutoff Head	52.0 Ft.
D.	Min. Wire-to-water efficiency	
	1. One pump running duty point	56.5%
	2. Best efficiency point	62.7%
E.	Max. Total Motor Input Power	
	1. One pump running duty point	5.2 HP
	2. Best efficiency point	4.86 HP
F.	Max pump speed	1745 rpm
G.	Max NPSHR	
	1. One pump running duty point	11.3 Feet
	2. Best efficiency point	9.3 Feet
H.	Min. motor rating @ 40 degrees C	5.0 HP
I.	Voltage/Cycle/Phase	230/60/3
J.	Motor design Type	NEMA B
K.	Motor Service Factor	1.15
L.	Motor Insulation	Class H
M.	Max. Motor pole number	4 Pole
N.	Max. Rated current (FLA)	6.7 Amps
O.	Min. Rated power factor	81%
P.	Max. Locked rotor current	41 Amps
Q.	Max. NEC Code Letter	H
R.	Min. Pump discharge size	4 Inches

1.08 PERFORMANCE (Operating Conditions) Lift Station No 30 (2 Pumps Required)

A.	One pump running duty point	800 gpm @ 46.6' tdh
B.	Best Efficiency point	576 gpm @ 63.2' tdh
C.	Min. Shutoff Head	112.0 Ft.
D.	Min. wire-to-water efficiency	
	1. One pump running duty point	58.6%
	2. Best efficiency point	61.6%
E.	Max. Total Motor Input Power	
	1. One pump running duty point	16.1 HP
	2. Best efficiency point	15.0 HP
F.	Max pump speed	1755 rpm
G.	Max NPSHR	
	1. One pump running duty point	20.0 Feet
	2. Best efficiency point	13.8 Feet
H.	Min. motor rating @ 40 degrees C	15.0 HP
I.	Voltage/Cycle/Phase	460/60/3
J.	Motor design Type	NEMA B
K.	Motor Service Factor	1.15

REQUEST FOR BIDS FOR REPLACEMENT OF LIFT STATION PUMPS (Continued):

L.	Motor Insulation	Class H
M.	Max. Motor pole number	4 Pole
N.	Max. Rated current (FLA)	19 Amps
O.	Min. Rated power factor	82%
P.	Max. Locked rotor current	114 Amps
Q.	Max. NEC Code Letter	H
R.	Min. Pump discharge size	4 Inches

1.09 PERFORMANCE (Operating Conditions) Lift Station No 31 (2 Pumps Required)

A.	One pump running duty point	1400 gpm @ 41.1' tdh
B.	Best Efficiency point	1062 gpm @ 53.4' tdh
C.	Min. Shutoff Head	93.0 Ft.
D.	Min. Wire-to-water efficiency	
	1. One pump running duty point	66.3%
	2. Best efficiency point	70.7%
E.	Max. Total Motor Input Power	
	1. One pump running duty point	21.9 HP
	2. Best efficiency point	20.3 HP
F.	Max pump speed	1755 rpm
G.	Max NPSHR	
	1. One pump running duty point	23.0 Feet
	2. Best efficiency point	22.0 Feet
H.	Min. motor rating @ 40 degrees C	20.0 HP
I.	Voltage/Cycle/Phase	230/60/3
J.	Motor design Type	NEMA B
K.	Motor Service Factor	1.15
L.	Motor Insulation	Class H
M.	Max. Motor pole number	4 Pole
N.	Max. Rated current (FLA)	26Amps
O.	Min. Rated power factor	83%
P.	Max. Locked rotor current	148 Amps
Q.	Max. NEC Code Letter	H
R.	Min. Pump discharge size	6 Inches

1.10 PERFORMANCE (Operating Conditions) Lift Station No 32 (2 Pumps Required)

A.	One pump running duty point	700 gpm @ 38.2' tdh
B.	Best Efficiency point	535 gpm @ 48.7' tdh
C.	Min. Shutoff Head	84.0 Ft.
D.	Min. Wire-to-water efficiency	
	1. One pump running duty point	58.6%
	2. Best efficiency point	62.4%
E.	Max. Total Motor Input Power	
	1. One pump running duty point	11.5 HP
	2. Best efficiency point	10.6 HP

REQUEST FOR BIDS FOR REPLACEMENT OF LIFT STATION PUMPS (Continued):

F.	Max pump speed	1735 rpm
G.	Max NPSHR	
	1. One pump running duty point	14.6 Feet
	2. Best efficiency point	12.7 Feet
H.	Min. motor rating @ 40 degrees C	10.0 HP
I.	Voltage/Cycle/Phase	230/60/3
J.	Motor design Type	NEMA B
K.	Motor Service Factor	1.15
L.	Motor Insulation	Class H
M.	Max. Motor pole number	4 Pole
N.	Max. Rated current (FLA)	13 Amps
O.	Min. Rated power factor	89%
P.	Max. Locked rotor current	64 Amps
Q.	Max. NEC Code Letter	H
R.	Min. Pump discharge size	4 Inches

1.11 PERFORMANCE (Operating Conditions) Lift Station No 33 (2 Pumps Required)

A.	One pump running duty point	3000 gpm @ 22.3' tdh
B.	Best Efficiency point	2023 gpm @ 39.4' tdh
C.	Min. Shutoff Head	71.0 Ft.
D.	Min. Wire-to-water efficiency	
	1. One pump running duty point	57.9%
	2. Best efficiency point	71.4%
E.	Max. Total Motor Input Power	
	1. One pump running duty point	29.2 HP
	2. Best efficiency point	28.4 HP
F.	Max pump speed	1170 rpm
G.	Max NPSHR	
	1. One pump running duty point	20.0 Feet
	2. Best efficiency point	13.2 Feet
H.	Min. motor rating @ 40 degrees C	25.0 HP
I.	Voltage/Cycle/Phase	460/60/3
J.	Motor design Type	NEMA B
K.	Motor Service Factor	1.15
L.	Motor Insulation	Class H
M.	Max. Motor pole number	6 Pole
N.	Max. Rated current (FLA)	43 Amps
O.	Min. Rated power factor	86%
P.	Max. Locked rotor current	246 Amps
Q.	Max. NEC Code Letter	H
R.	Min. Pump discharge size	8 Inches

REQUEST FOR BIDS FOR REPLACEMENT OF LIFT STATION PUMPS (Continued):

1.12 PERFORMANCE (Operating Conditions) Lift Station No 35 (2 Pumps Required)

A.	One pump running duty point	700 gpm @ 38.2' tdh
B.	Best Efficiency point	1314 gpm @ 42.0 tdh
C.	Min. Shutoff Head	81.0 Ft.
D.	Min. Wire-to-water efficiency	
	1. One pump running duty point	58.6%
	2. Best efficiency point	69.2%
E.	Max. Total Motor Input Power	
	1. One pump running duty point	11.5 HP
	2. Best efficiency point	20.3 HP
F.	Max pump speed	1755 rpm
G.	Max NPSHR	
	1. One pump running duty point	14.6 Feet
	2. Best efficiency point	22.5 Feet
H.	Min. motor rating @ 40 degrees C	25.0 HP
I.	Voltage/Cycle/Phase	460/60/3
J.	Motor design Type	NEMA B
K.	Motor Service Factor	1.15
L.	Motor Insulation	Class H
M.	Max. Motor pole number	4 Pole
N.	Max. Rated current (FLA)	30 Amps
O.	Min. Rated power factor	87%
P.	Max. Locked rotor current	180 Amps
Q.	Max. NEC Code Letter	H
R.	Min. Pump discharge size	6 Inches

1.13 PERFORMANCE (Operating Conditions) Lift Station No 36 (2 Pumps Required)

A.	One pump running duty point	800gpm @ 25.5' tdh
B.	Best Efficiency point	649gpm @ 31.4 tdh
C.	Min. Shutoff Head	60.0 Ft.
D.	Min. Wire-to-water efficiency	
	1. One pump running duty point	58.8%
	2. Best efficiency point	60.7%
E.	Max. Total Motor Input Power	
	1. One pump running duty point	8.8 HP
	2. Best efficiency point	8.51 HP
F.	Max pump speed	1740 rpm
G.	Max NPSHR	
	1. One pump running duty point	13.1 Feet
	2. Best efficiency point	12.8 Feet
H.	Min. motor rating @ 40 degrees C	7.5.0 HP
I.	Voltage/Cycle/Phase	460/60/3
J.	Motor design Type	NEMA B
K.	Motor Service Factor	1.15

REQUEST FOR BIDS FOR REPLACEMENT OF LIFT STATION PUMPS (Continued):

L.	Motor Insulation	Class H
M.	Max. Motor pole number	4 Pole
N.	Max. Rated current (FLA)	9.6 Amps
O.	Min. Rated power factor	88%
P.	Max. Locked rotor current	52 Amps
Q.	Max. NEC Code Letter	H
R.	Min. Pump discharge size	6 Inches

1.14 PERFORMANCE (Operating Conditions) Lift Station No 39 (2 Pumps Required)

A.	One pump running duty point	800gpm @ 25.5' tdh
B.	Best Efficiency point	649 gpm @ 31.4' tdh
C.	Min. Shutoff Head	60.0 Ft.
D.	Min. Wire-to-water efficiency	
	1. One pump running duty point	58.8%
	2. Best efficiency point	60.7%
E.	Max. Total Motor Input Power	
	1. One pump running duty point	8.8 HP
	2. Best efficiency point	8.51 HP
F.	Max pump speed	1740 rpm
G.	Max NPSHR	
	1. One pump running duty point	13.1 Feet
	2. Best efficiency point	12.8 Feet
H.	Min. motor rating @ 40 degrees C	7.5 HP
I.	Voltage/Cycle/Phase	230/60/3
J.	Motor design Type	NEMA B
K.	Motor Service Factor	1.15
L.	Motor Insulation	Class H
M.	Max. Motor pole number	4 Pole
N.	Max. Rated current (FLA)	9.6 Amps
O.	Min. Rated power factor	88%
P.	Max. Locked rotor current	52 Amps
Q.	Max. NEC Code Letter	H
R.	Min. Pump discharge size	4 Inches

1.15 PERFORMANCE (Operating Conditions) Lift Station No 42 (2 Pumps Required)

A.	One pump running duty point	600 gpm @ 19.3' tdh
B.	Best Efficiency point	432 gpm @ 27.8' tdh
C.	Min. Shutoff Head	52.0 Ft.
D.	Min. Wire-to-water efficiency	
	1. One pump running duty point	56.5%
	2. Best efficiency point	62.7%
E.	Max. Total Motor Input Power	
	1. One pump running duty point	5.2 HP
	2. Best efficiency point	4.86 HP

F.	Max pump speed	1745 rpm
G.	Max NPSHR	
	1. One pump running duty point	11.3 Feet
	2. Best efficiency point	9.3 Feet
H.	Min. motor rating @ 40 degrees C	5.0 HP
I.	Voltage/Cycle/Phase	460/60/3
J.	Motor design Type	NEMA B
K.	Motor Service Factor	1.15
L.	Motor Insulation	Class H
M.	Max. Motor pole number	4 Pole
N.	Max. Rated current (FLA)	6.7 Amps
O.	Min. Rated power factor	81%
P.	Max. Locked rotor current	41 Amps
Q.	Max. NEC Code Letter	H
R.	Min. Pump discharge size	4 Inches

1.16 WARRANTY

A. General

1. Pump manufacturer will pay cost of parts and labor during the warranty period, provided that the pump, with cable attached, is returned prepaid to an authorized repair facility for repairs. Coverage of parts and labor will be provided for periods indicated below.
2. This warranty shall not apply to any product or part of product which has been subjected to misuse, misapplication, accident, alteration, neglect, or physical damage and monitoring equipment has been bypassed or removed.
3. Warranty does not cover costs for standard and/or scheduled maintenance or parts that, by virtue of their operation require replacement through normal wear, unless a defect in material or workmanship can be determined by manufacturer.
4. Warranty period shall be as follows and from the date of shipment from the factory or other manufacturer approved point in time but no later than startup and beneficial use of pumping system.
   a. 0 – 24 months warranty is 100%.
   b. 25 – 39 months warranty is 50%
   c. 40 – 60 months warranty is 25%

PART 2. PRODUCTS

2.01 PUMPS

A. Manufacturers

1. Pumps shall be the product of Flygt Pumps OR Equal
2. Engineer approved pump manufacturer.

REQUEST FOR BIDS FOR REPLACEMENT OF LIFT STATION PUMPS (Continued):

B. Design
   1. General
      a. Major pump components shall be of gray cast iron, Class 35, with smooth surfaces devoid of blowholes and other irregularities.
      b. Exposed nuts and bolts shall be AISI type 304 stainless steel or brass construction.
      c. All surfaces, other than stainless steel, shall be factory sprayed with alkyd primer and synthetic resin enamel rubber paint finish.
      d. All mating surfaces where watertight sealing is required shall be machined and fitted with Nitrile or Viton rubber o-rings.
      e. No secondary sealing compounds, rectangular gaskets, elliptical O-rings, grease or other devices shall be used.
   2. Impeller
      a. The impeller shall be of 25% chrome cast iron, ASTM A-532 (Alloy III A), dynamically balanced, semi-open, multi vane, backswept, non-clog design.
      b. The impeller vane leading edges shall be mechanically self-cleaned upon each rotation as they pass across a machined spiral groove located on the stationary insert ring maintaining an unobstructed leading edge.
      c. The impeller shall have induction hardened, screw shaped leading edges and shall be capable of handling solids, fiberous materials, heavy sludge and other matter found in wastewater.
      d. Impellers shall be locked to the shaft and shall be coated with alkyd resin primer.
      e. Impellers shall be trimmed to specifically meet the conditions of operation.
   3. Insert Ring
      a. A replaceable insert ring made of 25% chrome cast iron, ASTM A-532 (Alloy III A) and having an integral machined spiral shaped groove shall be installed in the pump volute.
      b. The clearance between the insert ring and the impeller shall be adjustable.
   4. Volute
      a. Pump volutes shall be single piece gray cast iron, Class 35B, non concentric design with smooth passages large enough to pass any solids that may enter the impeller. Minimum inlet and discharge size shall be as indicated herein.
      b. Minimum inlet and discharge size shall be as indicated herein.
   5. Motor
      a. The pump motor shall be a NEMA B design, induction type with a squirrel cage rotor, shell type design, housed in an air filled, water tight chamber..
      b. The stator windings shall be insulated with moisture-resistant Class H insulation for 180 degrees C. The motor shall be designed for continuous duty capable of fifteen (15) evenly spaced starts per hour. Automatic reset, normally closed thermal sensors shall be imbedded in each phase of the motor windings to provide overheating protection.

c. The stator shall be insulated by the trickle impregnation method using Class H monomer-free polyester resin resulting in a winding fill factor of at least 95%.
d. The motor shall be designed for continuous duty while handling pumped media of up to 104 degrees F.
e. The stator shall be heat-shrink fitted into the cast iron stator housing. The use of fastening devices used to hold or locate the stator and that penetrate the stator housing are not acceptable.
f. The motor service factor shall be 1.15. The motor shall have a voltage tolerance of +/- 10%.
g. The motor shall be designed for a continuous operation in up to a 40 degree C ambient and shall have a NEMA Class B maximum operating temperature rise of 80 degrees C. The motor shall be inverter duty rated in accordance with NEMA MG1, Part 31.
h. Motor horse power shall be sufficient so that the pump is non-overloading throughout its entire performance curve, from shut-off to run-out.
i. Motor shaft shall be one-piece, extending through the pump and motor. Extension couplings shall not be acceptable. Shaft shall be constructed of 431 stainless steel. Shaft sleeves shall not be acceptable.
j. The power cable entry seal design shall preclude specific torque requirements to insure a watertight seal and shall allow simple field changing of power cable without affecting pump or motor warranty. The cable entry assembly shall consist of a seal flange designed and machined to provide precise compressions of cylindrical elastomer grommets flanked by stainless steel washers all having a close tolerance fit against the outside diameter of the cable and the inside diameter of the entry body. Cable sizing shall conform to NEC requirements for portable power use.
k. A separate junction chamber shall be provided inside the pump for connection of power cables to stator leads. The chamber shall be sealed by a nonmetallic terminal board bolted to a machined surfaced and utilizing an O-ring to obtain a watertight seal. Power shall be multi-conductor externally jacketed with oil resistant chloroprene rubber. Internal tinned copper conductor's insulation shall be ethylene propylene rubber and shall be color coded to identify each power lead.

6. Mechanical Seal
   a. Pumps shall be provided with a mechanical seal system consisting of two totally independent seal assemblies operating in an oil chamber between the pump volute and motor chamber for seal lubrication and cooling. The oil shall be a white paraffin based oil meeting the standards of FDA 172.87B.
   b. The lower seal shall act as the primary unit to prevent entry of pumped liquid to the oil chamber. The upper seal shall act as a secondary unit to prevent pumped liquid or oil from entering the stator housing. The seal system shall allow continuous pump operation with the motor exterior totally dry.
   c. Each seal unit shall consist of a positive driven rotation ring, a stationary ring and an independent spring to maintain interface contact. The upper and lower seals for all pumps shall have tungsten carbide rotation and stationary rings.

REQUEST FOR BIDS FOR REPLACEMENT OF LIFT STATION PUMPS (Continued):

7. Bearings
   a. The pumps shall be equipped with grease lubricated bearings with a system B-10 life of 50,000 hours at any point along the pump curve at maximum speed.
   b. The upper bearing shall be two row angular contact ball bearing.
   c. The lower bearing shall be two row angular contact ball bearing.
8. Pump protection devices
   a. The pump manufacturer shall provide a pump monitoring system which shall consist of pump protective devices and monitoring unit mounted on a dead front door or back plate of control panel.
   b. Pump protective devices
      1). Three thermal switches in the stator coils.
      2). A leakage sensor shall be provided in the stator housing to detect water intrusion.
   c. Monitoring and Status Unit
      1). The monitoring and status unit shall be designed to mount on the back plate or swing out door of the control panel.
      2). All monitoring devices shall connect to the control and monitoring unit.
9. Testing
   a. A factory performance test shall be performed on each pumping unit. Tests shall be sufficient to determine the curves of head, input horsepower, and efficiency relative to capacity.

Specifications:

SUCTION/DISCHARGE .....4" (76mm) x 4" (102mm) 125 lb. Flange
LIQUID TEMPERATURE .....160°F (71°C) Continuous
VOLUTE/WEARPLATE .....Cast Iron ASTM A-48, Class 30
Replaceable External Clearance Adjustment
CASE.....Cast Iron ASTM A-48, Class 30
END COVER.....Cast Iron ASTM A-48, Class 30
Full Diameter, Removable
SEAL PLATE .....Alloy Steel, Replaceable
PEDESTAL.....Cast Iron ASTM A-48, Class 30
IMPELLER: *Design* .....Two Vane, Open. Dynamically Balanced, ISO G6.3
Material .....Ductile Iron ASTM A-395
SHAFT .....High Carbon Steel
SHAFT SLEEVE .....316 Stainless Steel
SQUARE RINGS .....Buna-N
HARDWARE .....Corrosion Resistant Steel
PAINT .....Air Dry Enamel.
SEAL: *Design* .....Single Mechanical
Lubrication .....Grease, with Self-Feeding Lubricator
Material.....Rotating Faces - Carbon
Stationary Faces - Ceramic
Elastomer - Buna-N
Hardware -300 Series Stainless
BEARING - PUMP END:
Design .....Single Row, Ball, Oil Lubricated
Load .....Radial & Thrust
BEARING - DRIVE END:
Design .....Single Row, Ball, Oil Lubricated
Load.....Radial & Thrust
CHECK VALVE:
Material.....Elbow - Cast Iron ASTM A-48, Class 30
Valve Flap - Neoprene
Weight - Cast Iron ASTM A-48, Class 30

OPTIONAL EQUIPMENT.....Seal Materials, Case Heater, Stainless Hardware; Double Mechanical Seal, Oil Lubricated w/Pressure Compensating Lubricator; High Temperature Control; Flex Coupled Assy. with Base & OSHA Guard; Right Hand V-Belt Drive Assy. and Left Hand V-Belt Drive Assy., In-Line Vertical V-Belt Drive Assy., with Unit Base, Motor Adjusting Base & OSHA Guard

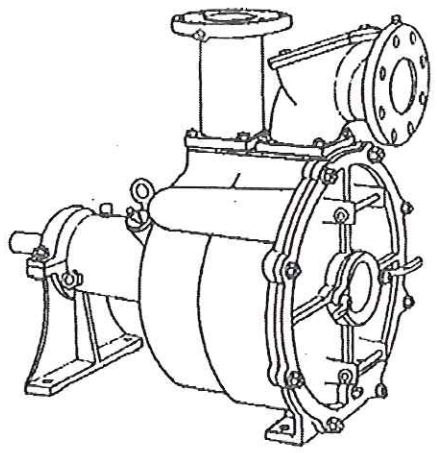

Model: **P04LC-10L** ★
P04LC-10D
P04LC-9L
P04LC-9D

Sample Specifications: Section 4 Page 7-8.

DESCRIPTION:

SELF-PRIMING CENTRIFUGAL SOLIDS HANDLING PUMPS DESIGNED FOR MUNICIPAL AND INDUSTRIAL APPLICATIONS.

Model: P04LC

3" Spherical Solids Handling
Universal Drive

www.cranepumps.com

Self-Priming Solids Handling Pumps

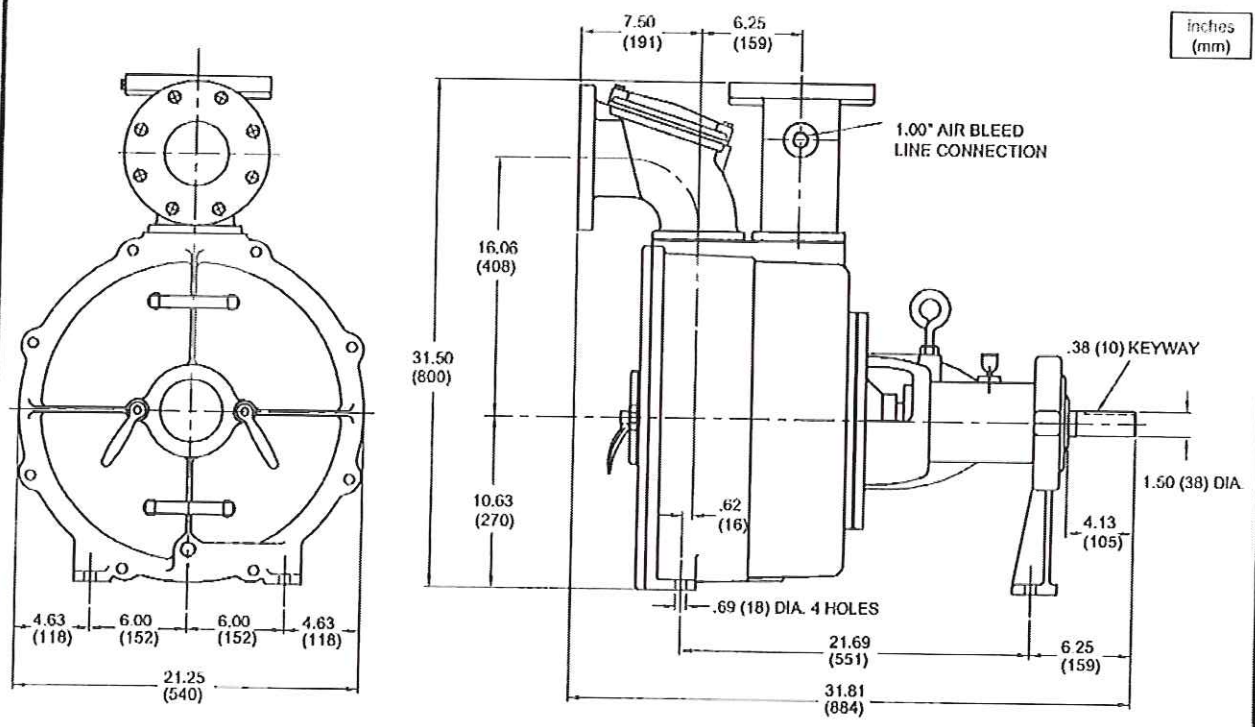

MODEL NO	PART NO	WEIGHT LBS. (kg)	
P04LC-10L	4C07D-0010L-031	540 (245)	
P04LC-10D	4C07D-0010D-031	540 (245)	
P04LC-9L	4C07D-0009L-031	540 (245)	
P04LC-9D	4C07D-0009D-031	540 (245)	

IMPORTANT !

1.) DO NOT USE FOR PUMPING FLUIDS WITH A FLASH POINT OF LESS THAN 100°F.
2.) MAKE CERTAIN THAT PUMP AND/OR MOTOR ASSEMBLY AND CONTROLS HAVE THE APPROPRIATE RATINGS FOR THE GIVEN APPLICATION AREA CLASSIFICATION. (ie DIVISION I, AGENCY LISTING ETC.)

Model: P04LC-10L

Performance Curve
Various RPM

Self-Priming Solids Handling Pumps

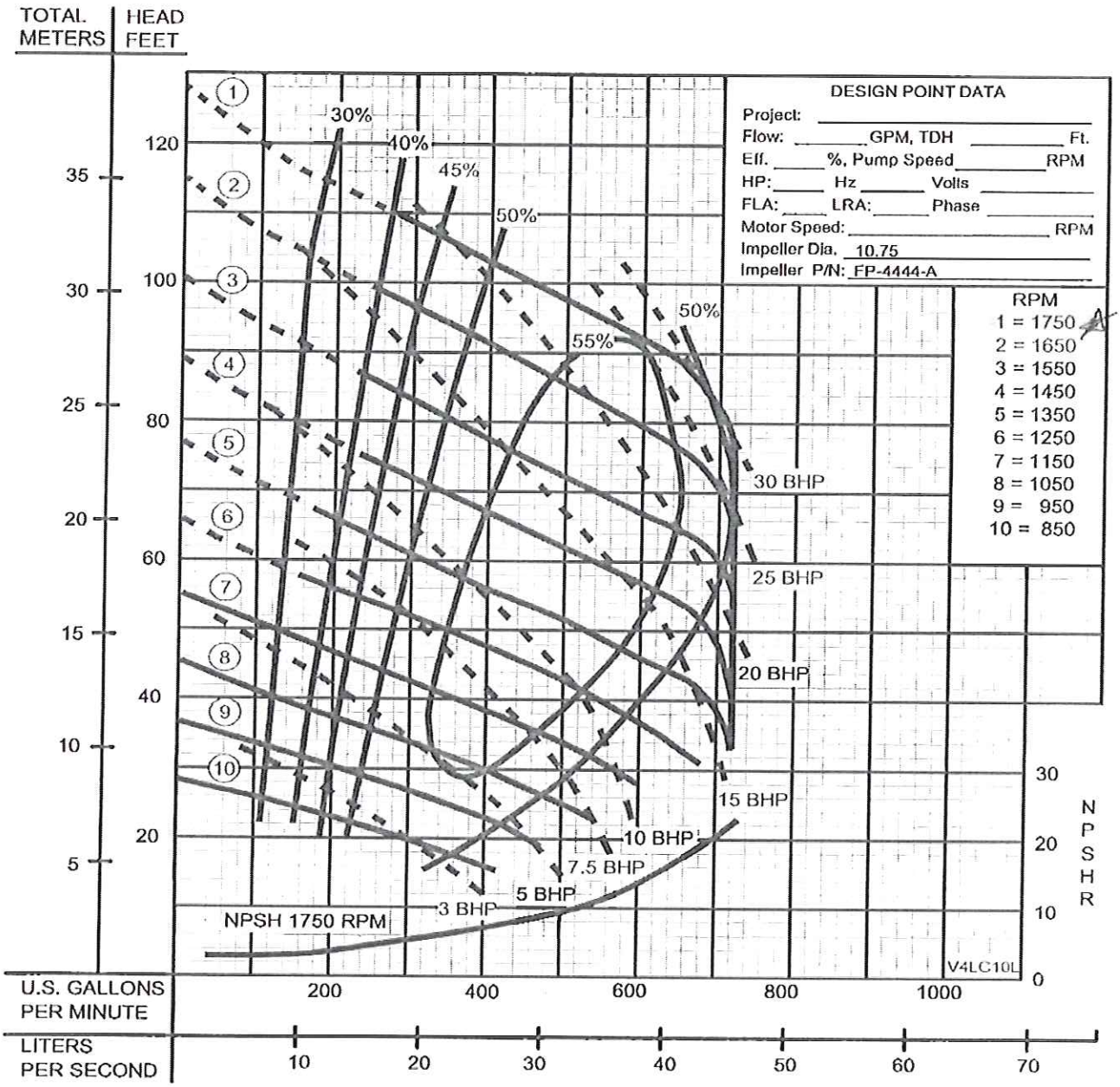

MAXIMUM DRY PRIMING LIFT					
PUMP SPEED	2 Min	4 Min	6 Min	8 Min	10 Min
850 RPM	4 Ft.	8 Ft.	11 Ft.	14 Ft.	15 Ft.
1150 RPM	11 Ft.	15 Ft.	16 Ft.	17 Ft.	17 Ft.
1450 RPM	11 Ft.	15 Ft.	16 Ft.	17 Ft.	17 Ft.
1750 RPM	25 Ft.	25 Ft.	25 Ft.	25 Ft.	25 Ft.

When pump is operating, the **SUCTION LIFT** is limited by the available **NPSH** which is the corrected atmospheric pressure minus the dynamic suction lift, vapor pressure loss and 2 foot safety factor. This ***net available*** **NPSH** must exceed the ***required*** **NPSH** of the pump or a reduction of capacity, loss of efficiency, noise, vibration and cavitation will result. Calculate the dynamic suction lift from the ***low*** liquid level to the centerline of the impeller. When pump is priming, it is limited by the dry **PRIMING LIFT** which is the vertical distance from the ***high*** liquid level to the centerline of the impeller.

DO NOT Operate in **"DASHED"** Area of HQ Curve. Testing is performed with water, specific gravity 1.0 @ 68° F @ (20°C), **other fluids may vary performance**

Self-Priming Solids Handling Pumps

*Previous Models		Current Models		
MODEL	P/N	MODEL	P/N	PAGE NO.
2C00D	2C00D-0006C-001	P02LA-6C	2C00D-0006C-001	1 - 4
3C01D	3C01D-0007B-001	P03LA-7B	3C01D-0007B-031	5 - 10
3C01D	3C01D-0008D-001	P03LA-8D	3C01D-0008D-031	5 - 10
3C03D	3C03D-0007B-001	P03LB-7B	3C03D-0007B-031	5 - 10
3C06D	3C06D-0008L-001	P03LC-8L	3C06D-0008L-031	11 - 14
4C02D	4C02D-0008D-007	P04LA-8D	4C02D-0008D-031	15 - 20
4C02D	4C02D-0009D-007	P04LA-9D	4C02D-0009D-031	15 - 20
4C04D	4C04D-0008D-001	P04LB-8D	4C04D-0008D-031	15 - 20
4C07D	4C07D-0009D-001	P04LC-9D	4C07D-0009D-031	21 - 27
4C07D	4C07D-0009L-001	P04LC-9L	4C07D-0009L-031	21 - 27
4C07D	4C07D-0010D-001	P04LC-10D	4C07D-0010D-031	21 - 27
4C07D	4C07D-0010L-001	P04LC-10L	4C07D-0010L-031	21 - 27
6C05D	6C05D-0010N-001	P06LB-10N	6C05D-0010N-031	28 - 33
6C05D	6C05D-0011J-001	P06LB-11J	6C05D-0011J-031	28 - 33
6C05D	6C05D-0012F-001	P06LB-12F	6C05D-0012F-031	28 - 33
6C08D	6C08D-0012F-001	------	------	
6C08D	6C08D-0013B-001	P06LC-13B	6C08D-0013B-031	34 - 38
6C08D	6C08D-0014X-001	P06LC-14X	6C08D-0014X-031	34 - 38
8C09D	8C09D-0012L-019	P08LA-12L	8C09D-0012L-031	39 - 43 & 48
8C09D	8C09D-0013D-019	P08LA-13D	8C09D-0013D-031	39 - 43 & 48
8C09D	8C09D-0014X-019	P08LA-14X	8C09D-0014X-031	39 - 43 & 48
AC0AD	AC0AD-0016X-019	P010LA-16X	AC0AD-0016X-031	44 - 48
		P010LA-14X	AC0AD-0014X-031	44 - 48

Previous Models are Discontinued. Consult Factory for current replacement if not shown.

CITY OF EDINBURG
BID FORM FOR
REPLACEMENT OF LIFT STATION PUMPS

BID NO. 2013-39

BID OPENING DATE: December 03, 2012 at 3:00 p.m.

I/We submit the following bid in **ORIGINAL FORM** for **REPLACEMENT OF LIFT STATION PUMPS** according to City of Edinburg requirements, less tax:

NOTE: In addition to responding to our "local" solicitation for bids/proposals vendors/contractors are encouraged to provide pricing on the above referenced items/products/services based on Buyboard, H-GAC, TXMAS and/or any other State of Texas recognized and approved cooperative which has complied with the bidding requirements for the State of Texas (any and all applicable fees must be included). All cooperative pricing must be submitted on or before bid/proposal opening date and hour.

CHECK ONE

☐ **BUYBOARD** ☐ **H-GAC** ☐ **TXMAS** ☐ **DEALER/LOCAL**
☐ **TX DIR** ☐ **TFC** ☐ **OTHER** _____
Specify

CONTRACT NUMBER: _____ (If applicable) COMMODITY NUMBER: _____ (If applicable)

ITEM	QUANTITY	DESCRIPTION	UNIT PRICE	EXTENDED PRICE
1	1	LS# 4 – 1600 N. SUGAR ROAD (Between Chapin & Russell), Submersible Pump	$_____	$_____
2	2	LS# 5 – 351 N. 5th STREET (Across UT-PAN AMERICAN), Submersible Pump	$_____	$_____
3	2	LS# 19 - 115 E. ROGERS RD. (NE corner of 281 & Rogers Rd.), Submersible Pump	$_____	$_____
4	2	LS# 28 – 280 N. 10th Street (Las Alamedas), Submersible Pump	$_____	$_____

BID FORM FOR REPLACEMENT OF LIFT STATION PUMPS (Continued):

ITEM	QUANTITY	DESCRIPTION	UNIT PRICE	EXTENDED PRICE
5	2	LS# 30 – 2240 W. ALBERTA (Del Prado & Borderland), Submersible Pump	$_____	$_____
6	2	LS# 31 – 855 E. CIBOLO ROAD (Segovia Unit), Submersible Pump	$_____	$_____
7	2	LS# 32 - 2702 W. FREDDY GONZALEZ (Las Estancias Subdivision), Submersible Pump	$_____	$_____
8	2	LS# 33 – 2250 E. RODGERS (East of Expwy 281), Submersible Pump	$_____	$_____
9	2	LS# 35 – 8480 N. HIGHWAY 281 (Across 76 Truck Stop), Submersible Pump	$_____	$_____
10	2	LS# 36 – 1801 S. RAUL LONGORIA (Front of Cano Gonzalez Elementary), Submersible Pump	$_____	$_____
11	2	LS# 39 – 2850 W. MILE 17½ (Encinos Escondidos Subdivision), Submersible Pump	$_____	$_____
12	2	LS# 42 – 1380 E. ALBERTA RD.(Northwest corner), Submersible Pump	$_____	$_____
13	2	LS# 23 - 124 E. ALBERTA RD. (S.Closner), Crown PO4LC-10L Self Priming Centrifugal Pump	$_____	$_____
14		**GRAND TOTAL**		$_____

The City reserves the right to increase or decrease the quantities depending on availability of funds.

BID FORM FOR REPLACEMENT OF LIFT STATION PUMPS (Continued):

All Addenda issued in respect to this project shall be considered official changes to the original bidding documents. It shall be the Bidder(s) responsibility to ensure that all Addenda have been received. Furthermore, bidders are advised that they must recognize, comply with, and attach a signed copy of each Addendum which shall be made part of their Bid Submittal. Bidder(s) signature on Addenda shall be interpreted as the vendor's "recognition and compliance to" official changes as outlined by the City of Edinburg and as such are made part of the original bidding documents.

Does the Company have an office located in Edinburg, Texas? Yes _____ No_____

Has the Company ever conducted business with the City of Edinburg? Yes _____ No_____

Respectfully submitted this _____ day of _____, 2012.

SIGNATURE: _____

TYPE/PRINT NAME: _____

TITLE: _____

COMPANY: _____

ADDRESS: _____

_____

TELEPHONE NO.: _____

FAX NO.: _____

EMAIL: _____