THE CITY OF EDINBURG

2014 STANDARDS MANUAL

All-America City

1968 2000 1995

CONSTRUCTION & DEVELOPMENT REQUIREMENTS

DEPARTMENT OF PUBLIC WORKS
ENGINEERING DIVISION
415 W. UNIVERSITY DR.
EDINBURG, TEXAS 78541
(956) 388-8210

UTILITIES DEPARTMENT
415 W. UNIVERSITY DR.
EDINBURG, TEXAS 78541
(956) 388-8212

ADOPTED BY CITY COUNCIL ON OCTOBER 01, 2007
REVISION NO. 8 APPROVED APRIL 15, 2014

TABLE OF CONTENTS

TABLE OF CONTENTS…….. 1

INTRODUCTION …… 3

ORDINANCE ……..…… 5 - 6

REVISIONS SHEET …….. 8

SECTION I DRAINAGE POLICY …… 10 – 29

SECTION 1 DRAINAGE EXHIBITS…… 30 - 41

SECTION II STREETS AND ROADWAYS POLICY ……... 43 – 58

SECTION II STREETS AND ROADWAYS EXHIBITS…… 59 - 81

SECTION III WATER AND SEWER POLICY …… 83 – 98

SECTION III WATER AND SEWER EXHIBITS …… 101 - 148

SECTION IV CONSTRUCTION PLANS SUBMITTAL POLICY …… 150 - 157

SECTION V STORMWATER POLICY …… 159 – 163

SECTION V STORMWATER EXHIBITS…… 164 – 168

CONTACT INFORMATION…… 169

This Page Intentionally Left Blank

Introduction

The City of Edinburg, Texas, Standards Manual has been developed as part of the Unified Development Code adopted by the Edinburg City Council and Effective October 1, 2007. City Council more specifically adopted the standards manual during three separate readings. Ordinance No. 08-3291 was adopted on August 19, 2008, becoming effective September 19, 2008 (See Attached). In accordance with this ordinance, the City Engineer has been delegated to promulgate a standards manual which shall outline minimum standards for drainage, streets, water & sewer improvements within the City and the City's Extra Territorial Jurisdiction. Compliance with the latest edition of this Manual is required (Refer to revision sheet for latest updates).

The information presented in this Manual has been prepared in accordance with generally accepted professional engineering practices and does not relieve the Engineer, Developer or Contractor of any legal responsibilities.

This Page Intentionally Left Blank

ORDINANCE NO. 08-3291

ORDINANCE ADOPTING THE CITY OF EDINBURG'S ENGINEERING STANDARDS'S MANUAL FOR THE CONSTRUCTION DEVELOPMENT REQUIREMENTS CONTAINING A REPEALER CLAUSE; CONTAINING A SAVINGS CLAUSE; AND PROVIDING FOR PUBLICATION AND EFFECTIVE DATE; AND ORDAINING OTHER PROVISIONS RELATED TO THE SUBJECT MATTER HEREOF.

WHEREAS, the City of Edinburg approved Ordinance 07-3209 adopting the City's Unified development code on August 6, 2007; and

WHEREAS, the Unified Development Code Addresses the City's minimum standards in various sections regarding drainage, streets, water and sewer; and

WHEREAS, through the Unified Development Code, the City desires to more specifically outline and address technical specifications through a Standards Manual on drainage, streets, water and sewer; and

WHEREAS, the Unified Development Code specifically references the Engineering Standard's Manual which outlines the City's minimum standards for drainage, streets, water and sewer and delegates authority to the City of Engineer to promulgate a Standards Manual.

NOW, THEREFORE, BE IT ORDAINED BY THE CITY COUNCIL OF THE CITY OF EDINBURG, TEXAS, THAT:

SECTION I. The Engineering Standard's Manual is hereby adopted by the City of Edinburg setting the minimum standards referenced in the Unified Development Code for new developments within the City and the City's extraterritorial jurisdiction.

SECTION II. REPEALER CLAUSE. The Ordinance shall be cumulative of all other ordinances dealing with the same subject, and any provision of any ordinance in direct conflict with any provision of the Ordinance, including the Chapters and Sections of the City Code of Ordinances specifically listed in the caption of this ordinance, is herby repealed to the extent of such conflict and the provisions of this Ordinance shall supersede any provisions in conflict herewith; all provisions of any other ordinance not in conflict herewith shall remain in full force and effect.

SECTION III. SAVINGS CLAUSE. If any section, part, or provision of this Ordinance is declared unconstitutional or invalid, by a court of competent jurisdiction, then, in that event, it is expressly provided, and it is the intention of the City Council in passing this Ordinance that its parts

shall be severable and all other of Ordinance shall not be affected thereby and they shall remain in full force and effect.

SECTION IV. PUBLICATION AND EFFECTIVE DATE. This Ordinance shall be published according to law and take effect on September 19, 2008, (due to third reading).

READ, CONSIDERED, PASSED AND APPROVED ON FIRST READING at a regular meting of the City Council of the City of Edinburg, Texas, at which a quorum was present and which was held in accordance with Vernon's Texas Codes Ann., Government Code, Section 551.041, on the 15th day of July, 2008.

READ, COSIDERED, PASSED AND APPROVED ON THE SECOND READING at a regular meeting of the City Council of the City of Edinburg, Texas, at which a quorum was present and which was held in accordance with Vernon's Texas Codes Ann., Government Code, Section 551.041, on the 5th day of August, 2008.

READ, COSIDERED, PASSED AND APPROVED ON THE SECOND READING at a regular meeting of the City Council of the City of Edinburg, Texas, at which a quorum was present and which was held in accordance with Vernon's Texas Codes Ann., Government Code, Section 551.041, on the 19th day of August, 2008.

CITY OF EDINBURG

By: _____
Joe Ochoa, Mayor

ATTEST:

By: _____
Myra L. Ayala Garza, City Secretary

CITY OF EDINBURG, TEXAS

APPROVED AS TO FORM:

By: _____
Ric Gonzalez, City Attorney

This Page Intentionally Left Blank

Revisions Sheet

Date	Description
R1 04/10/08	D-8, D-9, ST-1, ST-8, ST-9, ST-10, ST-11, ST-12, ST-13, ST-14, ST-15, P-1, P-2, P-3, P-4, P-5, P-6, P-9, P-10, P-11, P-13, P-18, W-4, S-3, S-4, S-5, S-6 & S-7
R2 06/16/08	DR-1, DR-2, DR-3, DR-4, DR-5, DR-6, DR-7, DR-8, DR-9, DR-10, DR-11, DR-13, DR-14, DR-15, DR-16, D-7, D-8, D-9, ST-14, ST-15, P-1, P-2, P-3, P-4, P-5, P-6, WS-1, WS-14, WS-15, W-1, W-2, W-3, W-4,
R3 07/11/08	DR-4, D-6, WS-3, WS-4, WS-5, WS-12, WS-13, & WS-33
R4 10/17/08	ST-8, ST-9, ST-10, ST-11, ST-12, ST-13, ST-14, ST-15, P-1, P-2, P-3, P-4, P-5, P-6, P-18, WS-6, W-1A, W-1B, W-2A, W-2B, & W-3
R5 01/12/10	DR-1, DR-2, DR-3, DR-4, DR-5, DR-6, DR-7, DR-8, DR-9, DR-10, DR-11, DR-12, DR-13, DR-14, DR-15, DR-16, DR-17, DR-18, DR-19, DR-20, D-1, D-2, D-3, D-6, D-7, D-8, ST-13, P-1, P-2, P-3, P-4, P-5, P-6, &
R6 02/04/10	P-4, P-5, P-6, & P-7
R7 03/10/10	D-1, D-2, D-3, D-4, D-5, D-6, D-7, D-8, D-9, D-10, D-11, D-12, P-1, P-2, P-3, P-4, P-5, P-6, P-7, P-8, P-9, P-10, P-11, P-12, P-13, P-14, P-15, P-16, P-17, P-18, WS-5, WS-6, WS-7, WS-8, WS-9, WS-10, WS-11, WS-12, WS-13, WS-14, WS-15, WS-16, WS-17, WS-18, WS-19, WS-20, WS-21, WS-22, WS-23, WS-24, WS-25, WS-26, WS-27, WS-28, WS-29, WS-30, WS-31, WS-32, WS-33, WS-34, WS-35, W-1, W-2, W-3, W-4, W-5, W-6, W-7, W-8, W-9, W-10, W-11, S-1, S-2, S-3, S-4, S-5, S-6, S-7, S-8, S-9, & S-10
R8 03/14/14	Cover, Revision Sheet, DR-1, DR-2, DR-3, DR-4, DR-5,DR-8, DR-9, DR-11, DR-16, DR-18, DR-19, DR-20, D-1, D-2, D-6, D-7,D-10, D-12, ST-1, ST-2, ST-3, ST-4, ST-5, ST-7, ST-9, ST-10, ST-11, ST-13, ST-14, ST-15, ST-16, P-1, P-2, P-3, P-4, P-5, P-6, P-7, P-8,P-9, P-10, P-11, P-12, P-13, P-14, P-15, P-16, P-17, P-18, P-19, P-20, P-21, P-22, P-23, WS-1, WS-2, WS-3, WS-4, WS-5, WS-6, WS-7, WS-8, WS-9, WS-10, WS-11, WS-12, WS-13, WS-14, WS-15, WS-16, WS-17, WS-18, WS-19, WS-20, WS-21, WS-22, WS-23, WS-24, WS-25, WS-26, WS-27, WS-28, WS-29, WS-30, WS-31, WS-32, WS-33, WS-34, W-3, W-11, W-12, W-13, W-14, W-15, W-16, S-1, S-2, S-4, S-5, S-6, S-7, S-8, S-9, S-10, S-11, S-12, SW-1, SW-2, SW-3, SW-4, SW-5, STW-1, STW-2, STW-3, STW-4, STW-5, CPS-7, CPS-8

This Page Intentionally Left Blank

SECTION 1 – DRAINAGE POLICY

1.01 General
1.02 Master Plan
- A. General Policy
- B. Development in Flood Prone Areas
- C. Outfall System
- D. Responsibility in Development
- E. Detention

1.03 Design Storm Frequency
1.04 Water Spread Limit
1.05 Drainage System Requirements
- A. Piping Systems
- B. Open Channels
- C. Inlet Design
- D. Culvert Crossings
- E. Valley Gutters
- F. Additional Criteria

1.06 Design Parameters
- A. Hydrology
- B. Hydraulics

1.07 Detention Storage Requirements
1.08 Required Submittals
- A. Drainage Report
- B. Engineering Study / Hydrologic/Hydraulic Modeling

1.09 Approved Materials
1.10 Erosion Control Plan
1.11 Warranty
1.12 Standard Drainage Details
- D-1 Type “A” Inlet Detail
- D-2 Type “A” Inlet with Extension Detail
- D-3 Type “C-C” Inlet Detail
- D-4 Precast Concrete Manholes Detail
- D-5 Concrete Pipe Support Collar Detail
- D-6 Down Drain Structure Details
- D-7 Standard Ditch Cross Section Detail
- D-8 Standard Pipe Bedding Detail
- D-9 Utility Crossing at Existing Street Detail
- D-10 Manhole Cover Detail
- D-11 Storm Water Runoff Detail
- D-12 Lot Layout Grading Detail

SECTION 1
DRAINAGE POLICY

1.01 General

The purpose of this section shall govern the planning, design, construction and operation of the storm drainage facilities within the City of Edinburg and all areas designated as its extraterritorial jurisdiction. It is to define the general requirements for the design of drainage improvements and to provide typical details of these improvements. The Director of Public Works and the Engineering, Streets, Drainage, Traffic and Airport Divisions should be consulted if variations from these standards are anticipated. In general these sections are conditions on drainage requirements adopted by the Code of Ordinances of the City of Edinburg specified in the **Unified Development Code**. In cases where limitations or physical barriers restrict compliance with the provisions of this section, adequate alternatives shall be considered by the Director of Public Works.

1.02 Master Plan

All designs must be sized and located according to the City Drainage Master Plans, County Drainage Master Plans and Texas Department of Transportation (TxDOT) regulations. The City of Edinburg will periodically update its Drainage Master Plan and the Project Engineer must be familiar with the most current adopted plans. Major deviations from this plan will not be allowed.

A. General Policy:

1. This design guide shall apply to all drainage improvements within the limits of the City of Edinburg (City) and it's two and a half (2.5) Mile Extraterritorial Jurisdiction (ETJ). When a conflict in design arises applicable criteria (Hidalgo County Drainage District # 1, Texas Department of Transportation, etc.) the more restricted criteria shall govern.

2. All proposed development within the City and its ETJ shall require a storm sewer outfall designated in accordance with the City Master Drainage Plan.

3. The drainage report and drainage systems shall be designed by a Licensed Professional Engineer holding a valid licensed to practice in the State of Texas and subject to approval by the Director of Public Works.

4. All drainage systems shall be designed to provide service to and through subject property and maximize coverage to the City-approved service area.

5. Drainage designs (minor drainage system) shall provide capacity for 10-year peak flows and an overland flow path for flows in excess of the design capacity, up to at least the 25-year event.

6 All storm sewer conduit and related appurtenances maintained by the City of Edinburg shall be located within City's dedicated right-of-way and/or recorded by instrument document drainage easements to the City.

7. In instances where proposed drainage infrastructure improvements require conveyance to an outfall, the developer shall be responsible for the design of the

conveyance to accommodate storm water runoff from fully developed conditions within the *entire* subject drainage basin and all reasonable interconnects. The City shall consider a cost share if funds are available or reimbursement program for the costs associated with the construction of the conveyance. A written format request for cost share with contractor's submittals shall be executed prior to the commencement of the improvements.

8. The City may participate, providing funds are available, in the extra cost of larger drainage structures on principal streets shown on the major thoroughfare plan.

9. In the event of a difference in grade between adjacent properties, each property shall be graded to detain away from the deviation. Grade differentials in excess of 1-foot shall require a retaining structure as approved by the Director of Public Works.

10. Construction activities shall not interfere with the normal operation of the existing drainage systems. Restricting or impeding the existing drainage patterns shall result in an issuance of a Stop Work Order until corrective measures have been completed to the satisfaction of the Director of Public Works.

11. Storm drainage designs shall include provisions to account for off-site drainage patterns affected by any proposed improvements.

12. Residential lots shall be graded to provide positive drainage towards the front of the lot at a minimum slope of 1%.

13. In no instance shall site grading on residential or commercial developments adversely affect neighboring properties.

14. In the event of a grade between adjacent properties, each property shall be graded to drain away from the deviation. Grade differentials in access of 1-foot shall require a retaining structure as approved by the Director of Public Works.

15. Variances from procedures described in this policy shall require approval from the Director of Public Works with the proper engineered submittals and presented to City Council for approval.

16. All formulas and factors appearing in the policy are presented in English units.

17. Peak flows shall not be increased at any location for any storm frequency more frequent than the 10-year storm.

18. Improvements which will increase the frequency of flooding in the depth of inundation of unprotected structures in the 100-year flood plain or areas of flooding shall <u>not</u> be permitted for construction. The developer must comply with the City Unified Development Code, Article 4 – Environmental Standards.

19. All drainage facilities including street gutters, inlets, pipes and related appurtenances to the drainage outfall system shall be designed to intercept and convey runoff from a 10-year frequency storm event and checked for a 25-year frequency storm event.

20. Construction activity shall not interfere with normal operation of existing drainage systems.

References

Unified Development Code: (Adopted in 2007), Article 4 – Flood Prone Areas
Article 7 – Reimbursements
Article 8 – Design Requirements

2014 Standard Manual: (Adopted in 2007), Section III – Water and Sewer Policy;

City Participation with Developer and Reimbursements requirements - Refer to Article 7, Section 7.506 – *Responsibility for payment of On-site and Off-site Installation cost, also in Section 3 of the 2007 Standard Manual, Water and Sewer Policy, 3.07 – Sample Reimbursement Contract.*

B. Development in Flood Prone Areas:
Also Refer to the Unified Development Code, Article 4 – Environmental Standards

1. All new development shall be located two (2)-foot above base flood elevation as determined in Zones "A's".

2. No fill shall be placed within a special flood hazard area unless the effect of the fill on water storage and water quality is fully mitigated in one or more of the following ways:

   a. Excavation of a volume of soil comparable to the volume that was filled to bring the surface of the land to the base flood elevation. However, excavation is prohibited at depths that would:
      i. Increase the velocity of stormwater flows,
      ii. Cause significant new erosion; or
      iii. Expose the water table to contamination by pollutants which may be present in stormwater runoff.
   b. A stormwater management system is installed or improved in a location and manner that compensates for the removal of the filled area form the floodplain.
   c. If the compensatory storage is provided in the floodplain, the combination of filling, compensatory storage, and detention is intended to lower the flood elevation by increasing channel capacity in accordance with UDC, Section 4.207 – *Detention in Floodplains*.

3. No improvements shall be constructed which will increase the frequency of flooding or the depth of the inundation of unprotected structures in the 100-year flood plain or areas of flooding.

4. No access easements or streets may be constructed at an elevation lower than 1-foot below the base flood elevation.

5. Any property within the 100-year floodplain must provide an amount of floodwater storage capacity after development, which is not less than the pre-existing floodwater storage capacity of said property during the 100-year flood, regardless

of whether such pre-existing flood storage capacity is due to natural or artificial causes.

6. Parking in floodplain is permitted if the parking surfaces are located at elevations not lower than 6-inches below the base flood elevation.

C. Outfall System:

1. All subdivision proposals shall convey stormwater runoff to the nearest publicly maintained drainage system and provide the necessary engineering studies and/or hydraulic/hydrologic modeling to demonstrate adequacy of the conveyance stream.

2. The drainage outfall system (drain ditches) shall be designed to carry and/or store the runoff from a minimum of a 50-year frequency storm. Maintaining the outfall system shall be the City's responsibility. The outfall system consists of those lines shown on the City's Master Drainage Plan.

3. Any proposed development bordering an identified open channel outfall system shall be required to dedicate the necessary Right-of-Way as shown in the Drainage Master Plan.

4. All proposed development within the City and its ETJ shall require a storm sewer outfall designated in accordance with the Master Drainage Plan.

5. In areas where the City or another developer has installed the Offsite Outfall Drainage Systems, and a reimbursement policy and contract has been initiated, all proposed developments shall be required to pay their pro-rata share of those costs as per the contract prior to connecting to the existing outfall system. In general, City's participation requirements are as per the Unified Development Code, Section 7.506 – *Responsibility for Payment of On-Site and Off-Site Installation Costs*.

D. Responsibility in Development:

1. Developers must provide acceptable conveyance for storm waters from the development to the outfall at their expense. All drainage facilities shall be sized to provide capacity for the development.

2. All construction of on-site drainage facilities are the responsibility of the developer.

3. All on-site detention facilities must be designed in accordance with City's standards specified herein and dedicated to the city along with easements and rights-of-ways.

4. Drainage requirements not considered through the subdivision process will be addressed at building permit process. All new construction shall meet the city's drainage requirements.

5. A ten-year developer's reimbursement contract may be entered with the City for the costs of over-sizing the off-site system for future development. Any future development that connects to the system will be ultimately responsible for reimbursing its pro-rata share to the developer.

E. Detention Storage & Pond Requirements:

Detention ponding facilities are intended to store increased runoff from developed property and release this runoff at the rate that existed prior to development or redevelopment. By providing detention ponding, increased runoff impacts of downstream facilities may be controlled and minimized to reduce potential damages and need for greatly expanded stormwater conveyance facilities. Detention ponds may be required for all individual development projects.

1. Peak flow

a. No development shall cause downstream property owners, watercourses, channels, or conduits to receive excess stormwater runoff, compared to the proposed development site with the land in its natural, undeveloped condition. "Undeveloped condition" includes all natural retention areas and drainage ways, plus existing highway drainage structures.
b. Regulation of peak flows to allowable levels as determined by the provisions of the policy shall be achieved by storage on-site or off-site. Acceptable methods include recreational areas, property line swales, ponds, reservoirs, channels, and yard areas below flow line of gutter. Subsurface storage designs may be considered by the Director of Public Works to comply with storage requirements.

2. On-Site Detention

This requirement will be determined by the Director of Public Works on a case by case situation. Detention ponds that are created for use also as open-space public parks will be designed with a below surface drainage system to avoid standing residual water normally collected in the pond bottom from intermittent rain storms and surface irrigation. Any drain pipes with open ends exposed in the pond area will be screened or grated for safety precautions. On-site detention shall be required unless the Director of Public Works determines it is undesirable for one or more of the following reasons:

a. The detention facilities will lead to the proliferation of small detention facilities which may not be well-maintained in the long term.
b. Restricted release pipes are unlikely to be properly maintained.
c. The detention facilities are likely to cause an increase in the flood crest.
d. The development is tributary to a City regional storm water facility with sufficient capacity to serve the development.
e. The development is residential subdivision of less than 10 lots.
f. The development is a non-residential building that is less than 20,000 square feet.

3. Retention Ponds:

Retention ponds will not typically be allowed unless other alternatives are not available. The allowability of retention ponds will be determined by the Director of Public Works. A geotechnical evaluation will be mandatory.

The design of detention/retention facilities shall follow the SWPPP guidelines. Should retention be allowed, the dissipation of the stored runoff will be accomplished as rapidly as possible, but not longer than 48 hours, primarily through the use of the below grade infiltration gallery systems. Residual collected runoff in the pond bottom is not acceptable.

4. Off-Site Detention – Where the Director of Public Works, or a designee, finds on-site detention to be undesirable, the subdivider shall then pay to the City an amount equal to either the prorated cost of a municipal detention facility to serve the property, or the cost of the land which would have been required for the detention facility, whichever is less. All funds paid to and received by the City in lieu of providing a detention facility shall be used by the City for stormwater control purposes that benefit the properties that were the subject of a payment in lieu.

5. Bermed yards are not an acceptable method of detention.

6. Parking lots shall not be considered an acceptable method of detention.

7. The Homeowner Association or individual property owner(s) shall be responsible for maintaining stormwater detention/retention facilities. The City will accept no responsibility for detention/retention facilities, unless specific written arrangements are made with the City and incorporated into the development approval process prior to final approval of the development.

1.03 Design Storm Frequency

Storm frequency is a basic criterion necessary in storm drainage design and refers to the magnitude of a storm. Therefore, the selected design frequency establishes the degree of protection desired. Initial storms, as referred to in this manual designate a storm frequency within a 10 to 25-year reoccurrence cycle. Runoff from an initial storm is normally intercepted and conveyed by a conveyance system consisting of inlets and a pipe system. A 100 year storm refers to a rainfall having a 1% probability of occurring in one year. Major storms are controlled and conveyed in open drainage systems. Design storm frequencies are as follows:

TABLE I–1	
"DESIGN STORM FREQUENCIES"	
Area of Facility	Frequency
Enclosed Pipe System (Internal Subdivision)	10 years
Enclosed Pipe System (Outfall Master Drainage Plan)	10 years
Channels and Ditches (1)	25 years
Culverts and Small Bridges	25 years
Large Ditches	25 years
Floodways Building Lines	100 years
(1) Channels and ditches shall have one (1) foot of freeboard.	
(2) Large bridges are those with a total span greater than 50 feet.	

1.04 Water Spread Limit:

Streets function primarily to serve traffic and for that reason must be expected to have some degree of usability during periods of rainfall. Water spread limits are an effective way of defining the protection required to achieve that usability. The following water spread limits are established:

TABLE I-2		
"WATER SPREAD LIMITS"		
Street Classification	Permissible Water Spread	
Expressway	10-year Storm	(1 traffic lane may be Closed)
Major Thoroughfare (Divided)	10-year Storm	(1 traffic lane must remain open each direction)
Major Thoroughfare (Undivided)	10-year Storm	(2 traffic lanes must remain open)
Minor Streets	10-year Storm	(1 traffic lane must remain open)
Residential Streets	10-year Storm	(Water flow must not exceed top of curb)

The permissible water spreads are based upon the initial 10-year storm frequency, but consideration must be given to street conveyance of the major storm (100 year) and possible flooding. All streets shall be capable of conveying a major storm without water encroaching into adjacent buildings. This requirement of utilizing the streets to convey the major storm runoff may require increasing the capacity of the enclosed drainage system.

1.05 Drainage System Requirements

A. Pipe Systems

1. Pipe systems shall be designed to convey runoff from a 10-year frequency storm.

2. Storm sewer system shall utilize at a minimum rubber-gasket Class III reinforced concrete pipe (RCP) with a minimum size of 18-inches, Advance Drainage System (ADS HP Storm) pipe with a minimum size of 18-inches or an approved equal.

3. Manholes or Junction Boxes shall be utilized at all changes in pipe size and direction in both horizontal and vertical planes. Manhole spacing shall be maintained as presented:

TABLE 1-3	
SUGGESTED CONCRETE MANHOLE SPACING	
PIPE SIZE (Inches)	MAXIMUM SPACING (Feet)
18 to 24	500
30 to 36	650
42 to 54	750

Reference: FHWA, Urban Sewage Manual HEC-22 (2001)

4. Pipe diameters shall not decrease downstream.

5. Pipe soffit at change sizes should be set at the same elevation and where radial alignment is required; pipe joints shall not be deflected beyond manufacturer's suggested tolerance.

6. Minimum velocity with the pipe flowing full shall be 3-feet per second. *Pipe slope* shall be designed to provide a minimum velocity of 3-feet per second and a maximum velocity of 12-feet per second.

7. Minimum depth of cover for all storm sewer pipes shall be 3-feet from finished grade to the crown of the pipe. Depth of cover not meeting this requirement shall require structural calculations as approved by the Director of Public Works.

8. Trench Safety Protection shall be required for storm sewer system installation exceeding depths of 5-feet.

B. Inlet Design

1. Curb and grate inlets shall be used to facilitate the drainage of pavement sections and open areas.

2. Placement of inlets shall consider the safety of pedestrian, vehicular and bicycle traffic.

3. Inlets shall be placed at intervals necessary to meet maximum permissible spread limits and inlet capacities spacing shall not exceed 600-feet, with a maximum surface run of 300-feet from crest to sag of the roadway profile.

5. Runoff across roadway intersections consisting of a minor or principal arterial street is prohibited.

6. When curb extensions are required, no more than two extensions shall be used in conjunction with a primary inlet.

7. Inlet hydraulics shall be presented on the construction plan sheets.

C. Open Channels

1. Open channels shall normally be concrete lined. The reinforced concrete lining shall extend up to at least the water surface elevation of the 25-year frequency channel flow, and additional channel height shall be provided as required to convey the 100-year channel flow with one (1) foot of freeboard.

2. Reinforced concrete lined channels shall have a maximum side slope of 1 ½: 1 (horizontal to vertical).

3. Unlined ditches may be permitted with the following criteria:

a. Maximum side slope of 2:1 (Horizontal: Vertical) for stability and maintenance.
b. Sides must be compacted to a minimum of 80% Standard Proctor.
c. All unlined ditches must be properly seeded for stabilization.

4. All channels, lined and unlined, shall have a one - (1) inch per foot traverse bottom slope to the centerline.

D. Culvert Crossings

1. All culverts crossing under streets shall extend from property line to property line, plus sufficient length on each end to permit a 3:1 slope to extend from the street property line to a point 6 inches beneath the top of the headwall.

2. All culverts shall have adequate reinforced concrete headwalls; wing walls for 3:1 fill slope, and aprons at each end.

3. Submit Plan and Profile sheets, hydraulic calculations and required applicable details.

E. Valley Gutters

1. All valley gutters shall be constructed of reinforced concrete.

2. A maximum of two valley crossings may be used at an intersection.

3. Street crowns shall be reduced for approximately 100-ft on each side of valley gutter.

4. Widths:

a. Internal to subdivision 6-ft. minimum.
b. Intersection to off-street, major thoroughfares or arterials shall be 10-ft. minimum.

F. Additional Criteria:

1. Streets should be graded to avoid sumps and utilize the natural existing flow patterns.

2. Testing will be required at all laterals for storm sewer crossing streets and on all manholes and inlets by an engineering/construction testing laboratory. A minimum of 95% compaction is required.

1.06 Design Parameters

A. Hydrology

The primary consideration in any drainage study must begin with determination of rainfall in terms of intensity, duration and frequency. The data to be used for calculating the

amount of rainfall and the determination of runoff shall be that found in the Hydraulic Manual prepared and compiled by the Texas Highway Department-Bridge Division.

The Rational Method will be used due to its general simplicity and acceptance. The Rational Method is based on the principal that if rain persists at a uniform rate, the runoff will equal the rate of rainfall. This solution method is applicable to small areas and shall not be applied to areas exceeding 100 acres.

The method is expressed by the formula:

$$Q = CiA$$

Where

Q = Flow Discharge in (cubic feet/second) CFS

C = runoff coefficient calculated from Figure I-1

i = Rainfall intensity is inches per hour at the time of concentration or average runoff velocity in feet per minute of flow divided into the distance in feet along the course.

A = Area in acres of drainage basin

The Tables I-5, I-6 and I-7 show the adopted average velocities to be used to calculate minimum times of concentration percentage of impervious area, and street velocities and capacities to be used in the City of Edinburg.

TABLE I-4			
AVERAGE VELOCITIES TO BE USED TO CALCULATE TIMES OF CONCRENTRATION			
Areas	Slope in Percent		
	.1 - .5	.6 – 3 4 – 7	
	fps	fps	fps
Woodlands	0.10	0.10 – 1.5	1.5 – 2.5
Lawns/Pastures, Residential	0.15	0.20 – 2.5	2.5 – 3.5
Cultivated	0.25	0.30 – 3.0	3.0 – 4.0
Pavements			
Storm Sewer/Outlet Channels			
See Table I-5, Determine velocity by Manning's Formula			

TABLE I-5		
PERCENTAGE OF IMPERIOUS AREA		
Description	Plot Size (Sq. Ft.)	Average Impervious Area (Percentage)
Residential Estate	>43,560	9
Residential Dwelling	43,560	17
Residential Dwelling	21,780	38
Residential Dwelling	16,000	43
Residential Dwelling	10,000	46
Residential Dwelling	7,500	46
Residential Dwelling	5,000	50
Multi-Family Dwelling	Variable	72
Schools	Variable	35
Churches	Variable	85

Commercial District	Variable	85
Shopping Center District	Variable	100
Industrial District	Variable	72
Freeway	Variable	100
* Open Land	Variable	1
* Open land in rural areas and public parks increased to 1.0 percent (%) to amount for roads, drives and scattered buildings.		

B. Hydraulics:

Storm water is conveyed usually on the upper end of a drainage basin by inlets and storm sewers (closed conduit systems) to channels and through culverts and bridges. All calculations and design procedures for this hydraulic work shall follow the Hydraulic Manual prepared and compiled by the Texas Highway Department Bridge Division.

Table's I-7, I-8, I-9 and I-10 show adopted Manning's Coefficients, minimum pipe slopes, maximum channel velocities and roughness coefficients for channels to be used in Edinburg, Texas.

TABLE 1-6		
MANNING'S COEFFICIENT OF ROUGHNESS FOR PIPE		
Material	Value of n	Adopted
Concrete Monolithic Conduit	0.012 – 0.017	0.015
Concrete Pipe	0.011 – 0.015	0.013
Corrugated Metal Pipe (1/2" x 2 – 2/3")	0.022 – 0.026	0.024
25% Paved	0.021 – 0.023	0.022
Fully Paved	0.012 – 0.015	0.013
Plastic Pipe (Smooth)	0.011 – 0.015	0.013

TABLE I-7		
MINIMUM PIPE SLOPES		
Pipe Diameter	Slope in Feet Per Foot	
	n=0.013	n=0.024
18"	0.00254	0.00868
24"	0.00174	0.00592
30"	0.00129	0.00439
36"	0.00101	0.00345
48"	0.00069	0.00235
54"	0.00059	0.00201
60"	0.00051	0.00175
72"	0.00040	0.00137
Note: $V = 1.486/n \quad R^{2/3} \quad S^{1/2}$ Value where V=3fps		

TABLE I-8	
RECOMMENDED MAXIMUM CHANNEL VELOCITIES	
Channel Material	Maximum Channel Velocity, fps
Fine Sand	2.0
Coarse Sand	4.0
Fine Gravel	6.0
Earth	
Sandy Silt	2.0
Silt Clay	3.5
Clay	6.0
Grass Lined Earth	
Bermuda Grass – Sandy Silt	6.0
- Silt Clay	8.0
Poor Rock (Usually Sedimentary)	10.0
- Soft Sandstone	8.0
- Soft Shale	3.5
Good Rock (Usually igneous or hard metamorphic	12.0
Reinforced Concrete Lining	15.0

TABLE I-9			
MANNING'S COEFFICIENT OF ROUGHNESS FOR CHANNELS			
Lined Channels	n Values* Min.	Adopted Max.	n Values
Metal Corrugated	0.021	0.024	0.023
Concrete	0.012	0.018	0.015
Cement Rubble	0.017	0.030	0.025
Concrete Gutter	0.015	0.020	0.016
Rock Rip-Rap	0.030	0.045	0.035
Unlined Channels			
Poor grass growth	0.025	0.035	0.030
Average grass growth	0.035	0.045	0.040
Dense grass growth	0.040	0.050	0.045
Stony beds, weeds on bank	0.025	0.040	0.035
Rock cuts, smooth & uniform	0.025	0.035	0.030
Rock cuts, rugged & irregular	0.035	0.045	0.040
Natural Stream Channel			
Some grass & weeds, little or nor brush	0.030	0.035	0.035
Dense growth of weeds, depth of flow material greater than the weed height	0.035	0.050	0.045
Some weeds, light brush on banks	0.035	0.050	0.045
Some weeds, heavy brush on banks	0.050	0.070	0.060
For trees within channels with	0.010	0.020	0.015

branches submerged at high stage, increase all values above by			
Pasture, no brush			
Short grass	0.030	0.035	0.030
Tall grass	0.035	0.050	0.040
Cultivated areas			
No crop	0.030	0.040	0.035
Mature row crops	0.035	0.045	0.040
Mature field crop	0.040	0.050	0.045
Heavy weeds, scattered brush	0.050	0.070	0.060
Wooded	0.120	0.160	0.140
*Maximum and minimum "n" values adapted from the Texas Highway Department.			

1.07 Detention Storage Requirement Calculation

The Drainage Policy states "Peak flows shall not be increased at any location for any storm frequency, more frequent than the 10-year storm." This can be interpreted as "Flow rates from existing sites shall not be increased due to development for any storm having a 10% or greater chance of occurrence."

A. Calculate runoff from site for existing conditions.

1. Calculate runoff coefficient (C) based on ground cover, slope, soil type, etc.
2. Calculate time of concentration, or time for runoff to flow from furthest point of property to collect point(s).
3. From curve, select intensity corresponding to time of concentration.
4. Calculate runoff (Q).

B. Calculate runoff conditions from site for improved conditions.

1. Calculate runoff coefficient (C) based on improvements; i.e., paving, buildings, green areas.
2. Calculate revised time of concentration.
3. Determination of intensity and runoff not required at this stage.

C. Calculate on-site storage required.

1. Storage required equals the difference between the volume of runoff generated in the improved condition and the volume of runoff that can be discharged based on pre-development conditions.
2. The volume in and the volume out is calculated for storms of varying durations.
3. Select maximum storage indicated for compliance with City Policy.

A specific example is attached with reference numbers referring to the following notes.

4. Time of concentration beginning with calculated (t) for future conditions.

5. Intensity for corresponding time of concentration. These values are taken directly from graph or Hidalgo County statistical data.

6. Q is the runoff rate in cubic feet per second. It is calculated b the Rational formula of Q = CIA.

7. Volume of runoff in cubic feet for developed property. Determined by multiplying time of concentration (t) and runoff (Q).

8. Maximum rate the runoff can leave property. Determine from existing conditions.

9. Volume of runoff that can be discharged during the time of concentration. Calculated by multiplying time of concentration (t) and Q out.

10. Difference in Volume IN (column 4) and Volume OUT (column 7).

These calculations reflect one of the simpler ways of determining on-site detention, but one utilized by many cities. The calculations are verifiable and reproducible and minimize subjective judgment calls.

I. Existing

Area = 40,945 sf or 0.94 ac

$$t \text{ existing} = \frac{\text{Length}}{\text{Velocity}} = \frac{200 \text{ lf}}{0.15 \text{fps}} = 22 \text{ min (time of concentration)}$$

c existing = 0.15 (C for bare ground [runoff coefficient])

i_{10} = 5.99 in/hr (intensity for 22 min time of concentration)

Existing Q_{10} = (5.99 in/hr) (0.94 ac) (0.15)

= 0.84 cfs (calculated runoff for 10 yr. storm of min. duration)

II. Future

$$t_{10} = \frac{210 \text{ lf}}{1.8 \text{ fps}} = 1.9 \text{ min. use 5 min. (time of concentration (5 min. minimum)}$$

$$C \text{ future} = \frac{(21700 \times .95) + (19245 \times .15)}{21700 + 19245} = 0.57 \quad \text{(Average runoff Coefficient)}$$

(.95 for pavement .15 for green area)

t (1)		i (2)	Q in (3)	V in (4)	Q Out (5)	V out (7)	REQ'D V (7)
min	**hr**	**in/hr**	**cfs**	**cf**	**cfs**	**cf**	**cf**
5	0.08	11.04	5.9	1,770	0.84	252	1518
10	0.16	8.73	4.67	2,800	0.84	504	2,296
20	0.33	6.30	3.37	4,041	0.84	1,008	3,033
30	0.50	5.01	2.68	4,820	0.84	1,512	3,308
40	**0.66**	**4.20**	**2.24**	**5,386**	**0.84**	**2,016**	**3370 (MAX VOL)**
60	1.00	3.22	1.72	6,195	0.84	3,024	3,171
90	1.50	2.43	1.30	7,022	0.84	4,536	2,486

Storage Req'd = 3370 cf 3370 CF Provided (3370 cf = 0.077ac-ft)
See Site Plan

Outlet Size = Q outlet = .84 cfs = VA
where V = 3 fps

$$A = \frac{0.84 \text{ cfs}}{1 \text{ fps}} = 0.84 \text{ sf}$$

Proposed detention in open areas

TABLE I

TIME OF CONCENTRATION DETERMINATION
EDINBURG, TEXAS

			OVERLAND FLOW			CHANNEL, PIPE, STREET, ETC. FLOW					
COMPUTATION POINT	DESCRIPTION OF RUNOFF MEDIUM	C	LENGTH (ft)	GRADE (%)	TIME (min)	WIDTH/DIA (ft)	GRADE (%)	LENGTH (ft)	VELOCITY (fps)	TIME (min)	TOTAL TIME (min)

TIME OF CONCENTRATION

a) for overland flow time = $\frac{1.8\,(1.1 - C)\,/\,L}{(S)^{a}}$ Where C = coefficient of runoff
L = length
S = slope in percent

b) for storm sewers, streets, channels, etc. use Manning's Equation.

c) $T_c = \frac{L}{V} \times 60 = \text{min.}$ L = length
V = velocity

1.08 Drainage Report Submittal: The following information shall be required as part of the drainage report:

A. Drainage Report:

1. Summary of project:
   a. Existing and Proposed conditions.

2. Location Map

3. Location of proposed site with respect to FEMA Floodplain

4. Summary of Soil Conditions / Soils Classification

5. Summary of Existing Drainage Conditions

6. Summary of Proposed Drainage Conditions

7. Summary of Detention Requirements

8. Attachments:
   a. Exhibit A – Drainage Area Map including:
      i. All contributing areas delineation
      ii. Contours with spot elevations
      iii. Direction of flow
      iv. Existing / Proposed Storm Sewer systems; outfalls
      v. Design assumptions

   b. Exhibit B – FEMA Floodplain Map including Project Location
   c. Exhibit C – Soils Survey Map
   d. Exhibit D – Drainage Calculations including:
      i. Runoff, detention and hydraulic calculation summary
      ii. Time of concentration estimates
      iii. Runoff coefficient assumptions
      iv. Storage volume calculations
      v. Pipe and inlet capacities
      vi. Ponded widths and depths
      vii. Inlet capacities and bypass
      viii. Hydraulic Grade Line (HGL)

B. Engineering study and/or hydraulic/hydrologic modeling:
The study and modeling shall demonstrate the adequacy of the receiving stream or the necessary improvements necessary to provide drainage to the proposed development.

1.09 Approved Materials:

Approved material listing is as follows. All deviations must be approved in writing by the Director of Public Works and upon approval by the City's Technical Specification Review Committee. All pipe, fittings, and materials shall be new and in accordance with Standard Specifications.

A. Reinforced Concrete Pipe (RCP): Comply with requirements of ASTM C 76, Class III, installed with flexible plastic (Bitumen) gaskets at all joints. Gaskets shall comply with AASHTO M-198 75I, Type B, and shall be installed in strict accordance with pipe manufacturer's recommendations.

B. ADS (ADS HP STORM) HP Pipe: Comply with the requirements must meet or exceed ASTM F2736 and AASHTO MP-21-11 requirements for 12" to 30" pipe and ASTM F2881 and AASHTO MP-21-11 requirements for 36" to 60" pipe all with smooth interior and annular exterior corrugations. Material of pipe polypropylene compound and fittings shall be impact modified copolymer meeting the material requirements of ASTM F2736 for the perspective diameter. Watertight must comply with ASTM D3212 requirements. Spigots shall conform to ASTM F477 requirements. Testing shall be in accordance with ASTM F2487 requirements. Installation of pipe shall be in accordance to the ASTM D3221 requirements with a minimum 3-foot cover. Backfill for minimum cover shall consist of Class 1, Class 2 (min. 90% SPD) or Class 3 (minimum 95% SPD) material. Manning's "n" value for use in design shall be 0.012.

C. Manholes:

1. Cast-in-Place Manholes
   a. Cast-in-place Manholes shall be constructed of 3000 psi concrete.

2. Pre-cast Concrete Manholes
   a. In accordance with ASTM C-478.

D. Inlets:

1. Pre-Cast Type A

2. Pre-Cast Type C-C Grated

E. Cast Iron Frames, Covers, and Grates: As shown in Standard Details.

1.10 Warranty:

All materials, products, and workmanship shall be guaranteed for a period of 1-year from the written Date of Acceptance by the City and the date approved As-built drawings are submitted. 30-days prior to the date of acceptance a walk thru will be required and if any repair is required an additional time line will be addressed and after the completion City will take over maintenance of infrastructure.

1.11 Erosion Control Plans:

All construction activity within the City must address stormwater pollution prevention, and comply with all applicable State requirements for the pre and post construction storm water management. These are generally known as the "NPDES". The State requires the application for the above general permit to be submitted at least 7-days prior to the start of project. A Stormwater Pollution Prevention Plan (SWPPP) must be prepared prior to submittal and Best Management Practice (BMP) in place before construction begins. (See Stormwater Policy Section 5)

The City of Edinburg requires a signed copy of the certification statement in our files before construction begins. The SWPPP will be maintained by the developer/contractor and must be available for inspection at the job site at all times. In addition, the construction drawings set shall include plan sheets showing the Erosion Control Plan and Erosion Control Details for the development. If required, a written narrative must also be submitted to the Director of Public Works for review and approval. The narrative report must contain a project description, existing site conditions, and the name of the professional preparing the report.

1.12 Standards Drainage Details:

The following details show the adopted standards required by the City which are included at the end of this section:

TABLE OF DETAILS:

D-1	Type “A” Inlet Details
D-2	Type “A” Inlet with Extension Details
D-3	Type “C-C” Inlet Details
D-4	Pre-cast Concrete Manhole Details
D-5	Concrete Pipe Support Collar Details
D-6	Down Drain Structure Details
D-7	Ditch Cross Section Detail
D-8	Standard Pipe Bedding Details
D-9	Utility Crossing at Existing Street Detail
D-10	Manhole Cover Details
D-11	Storm Water Runoff Details
D-12	Lot Layout Grading Details

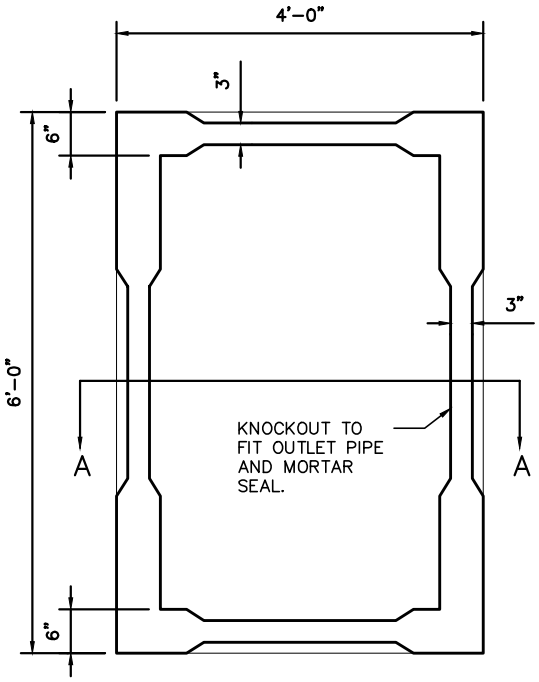

BOTTOM END SECTION

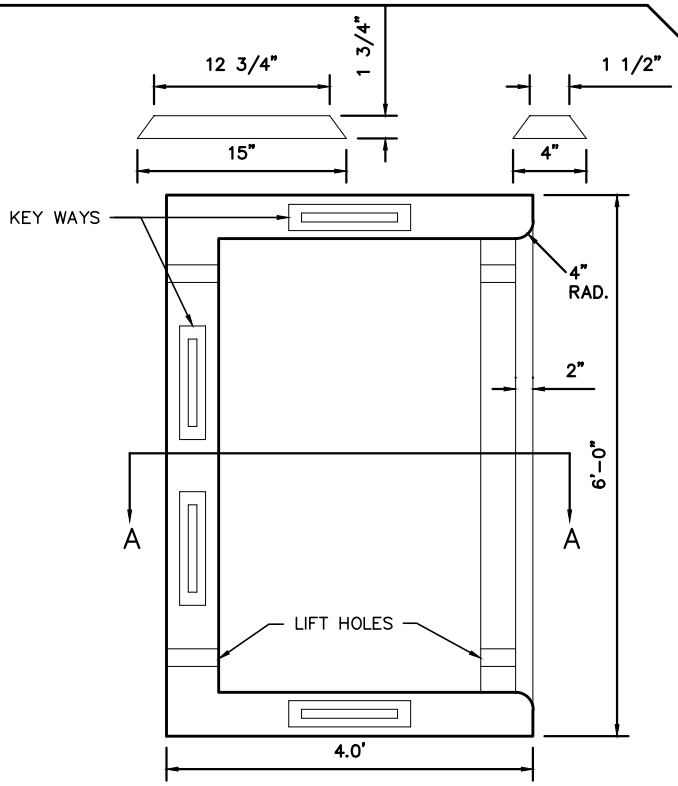

TOP VIEW PLAN

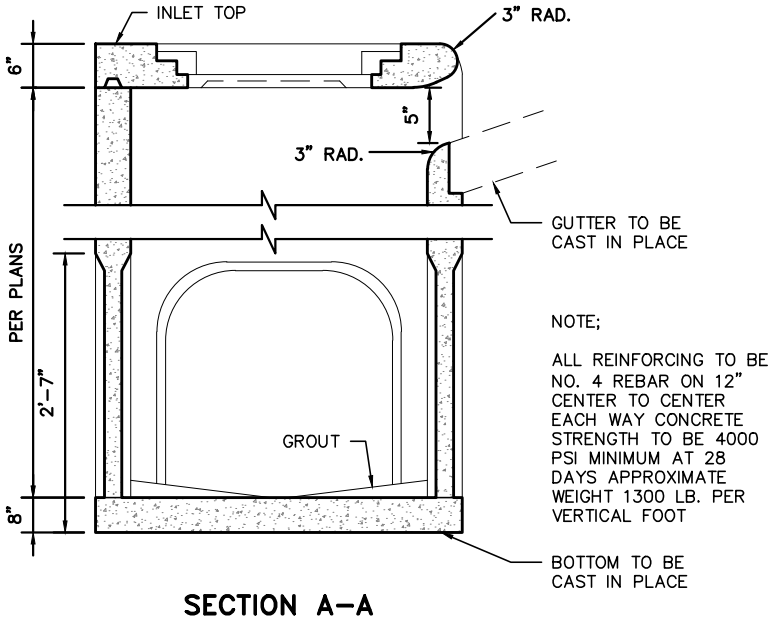

NOTE;

ALL REINFORCING TO BE NO. 4 REBAR ON 12" CENTER TO CENTER EACH WAY CONCRETE STRENGTH TO BE 4000 PSI MINIMUM AT 28 DAYS APPROXIMATE WEIGHT 1300 LB. PER VERTICAL FOOT

SECTION A–A

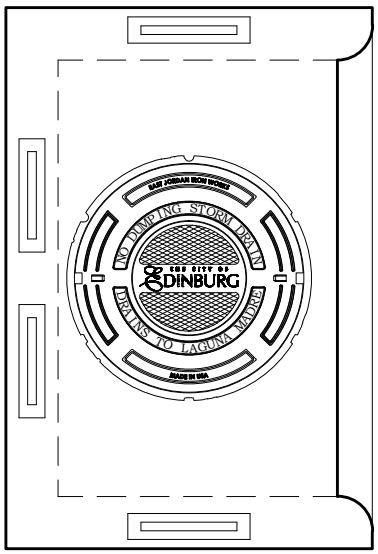

TOP VIEW PRECAST LID

PRECAST TYPE "A" INLET

D-1	TYPE "A" INLET DETAILS	THE CITY OF EDINBURG PUBLIC WORKS DEPARTMENT
	SCALE: N.T.S.	REVISED: JAG/AB
	DATE: DECEMBER, 2013	DRAWN BY: RMM/JAG

Dec 26, 2013 – 4:50PM

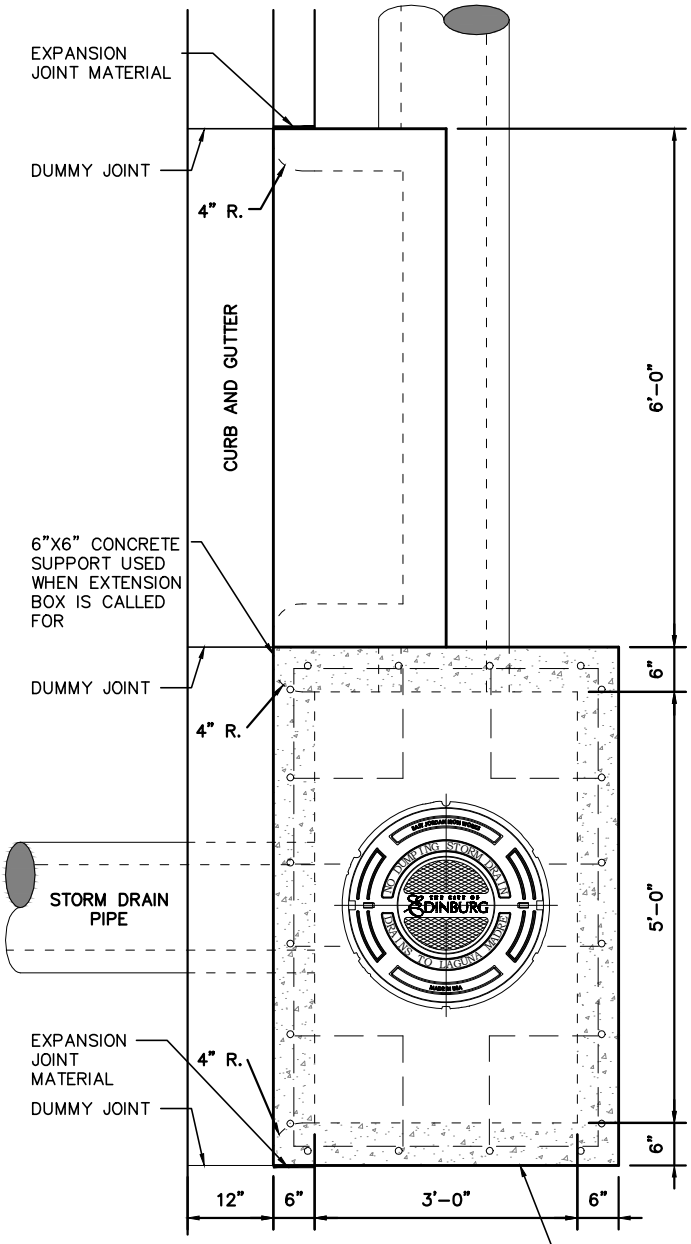

PLAN

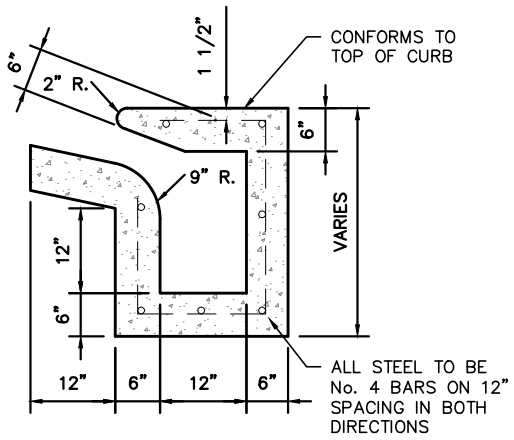

INLET EXTENSION

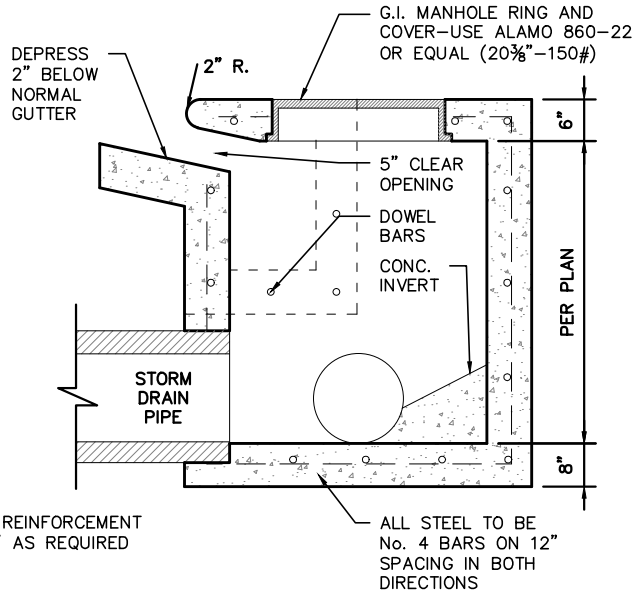

SECTION

NOTE;

1. SLOPE BOTTOM OF INLET EXTENSION ½"/1'-0" TOWARD INLET EXTENSION TO INLET TO BE MADE IN INCREMENTS OF 3'-0" OR 6'-0" ONLY. TRANSITION NORMAL GUTTER TO INLET SLOPE APPROXIMATELY 3'-0".

2. ALL STEEL TO BE No. 4 VERTICAL REINFORCEMENT HOOK 15" OR 6" AS REQUIRED

D-2	TYPE "A" INLET WITH EXTENSION DETAILS	THE CITY OF EDINBURG PUBLIC WORKS DEPARTMENT
	SCALE: N.T.S. / REVISED: JAG/AB	
	DATE: DECEMBER, 2013 / DRAWN BY: RMM/JAG	

Dec 26, 2013 – 4:51PM

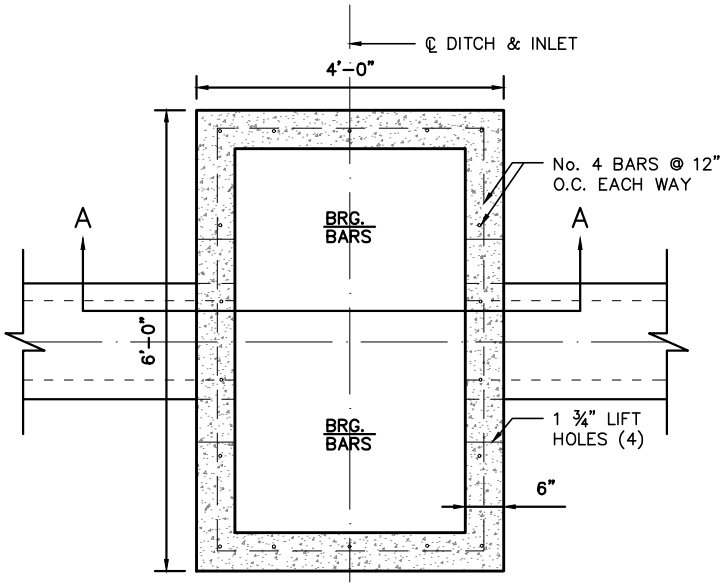

TOP VIEW OF INLET

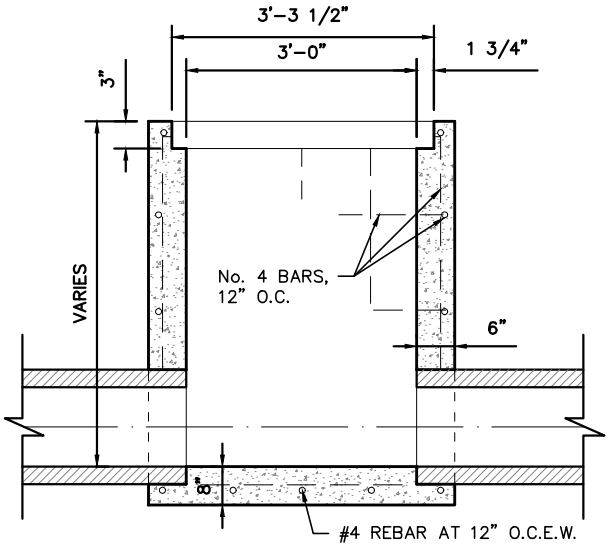

SECTION "A-A"

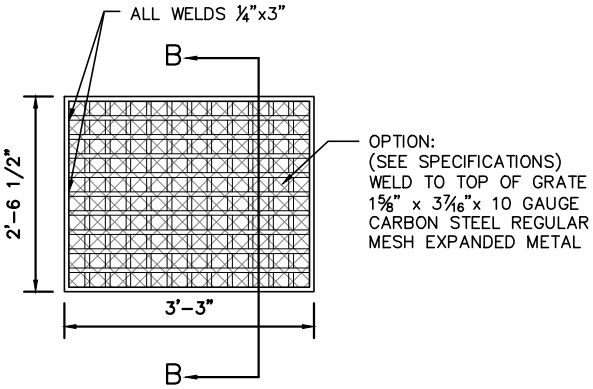

TOP VIEW OF GRATE

(BYCYCLE PROOF)

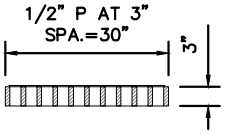

SECTION "B-B"

TYPE "C-C" GRATED INLET

(TWO GRATES PER INLET)

D-3	TYPE "C-C" INLET DETAILS	THE CITY OF EDINBURG PUBLIC WORKS DEPARTMENT
	SCALE: N.T.S.	REVISED: JAG/AB
	DATE: FEBRUARY, 2010	DRAWN BY: RMM/JAG

Dec 26, 2013 – 4:51PM

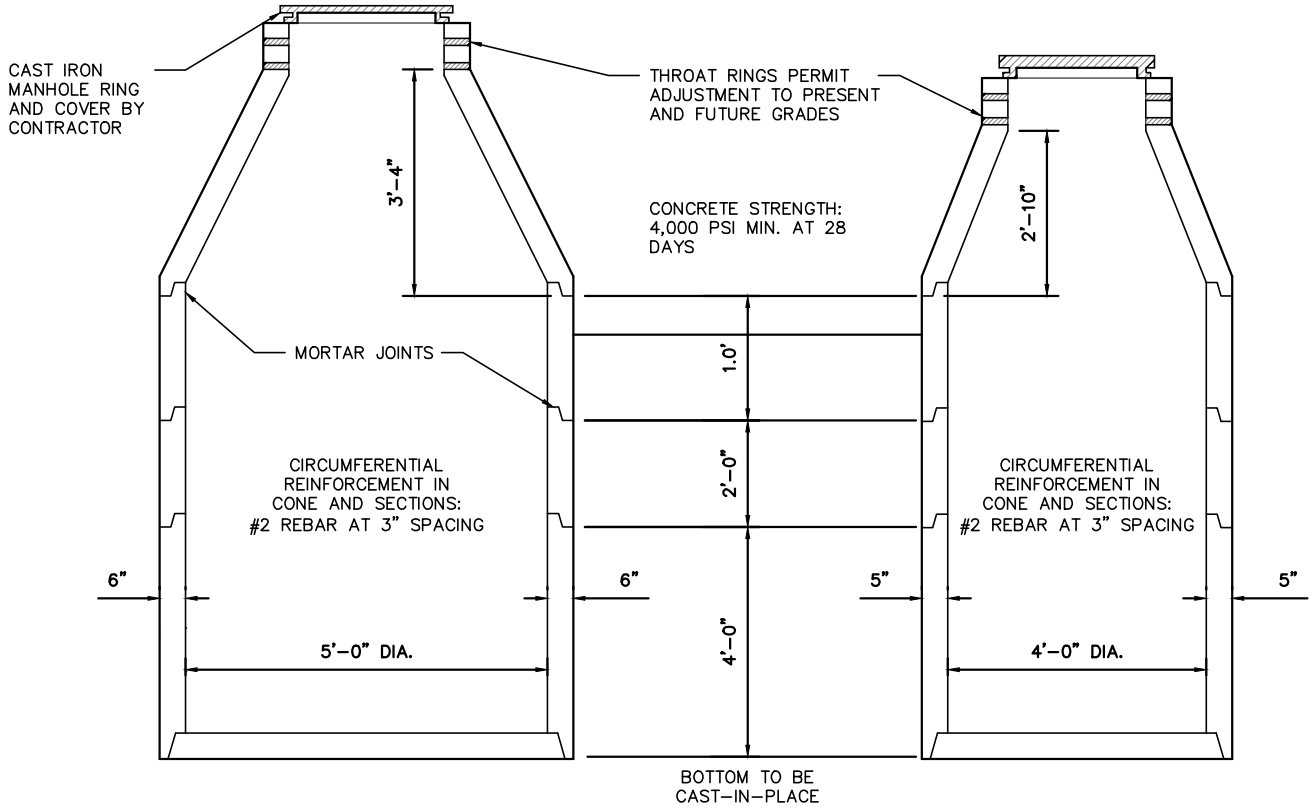

WEIGHTS OF 5'-0" DIA. MANHOLE

THROAT RING	90 LBS.
CONE SECTION	2800 LBS.
1'-0" SECTION	1329 LBS.
2'-0" SECTION	2658 LBS.
3'-0" SECTION	3987 LBS.
4'-0" SECTION	5316 LBS.

MANHOLES SECTIONS ARE CAST IN

1'-0" LENGTHS
2'-0" LENGTHS
3'-0" LENGTHS
4'-0" LENGTHS

WEIGHTS OF 4'-0" DIA. MANHOLE

THROAT RING	90 LBS.
CONE SECTION	1750 LBS.
1'-0" SECTION	875 LBS.
2'-0" SECTION	1750 LBS.
3'-0" SECTION	2625 LBS.
4'-0" SECTION	3500 LBS.

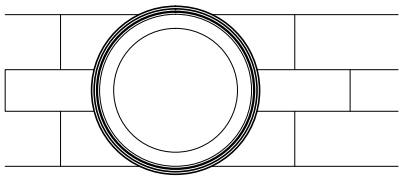

PRECAST CONCRETE SEGMENTS MAY BE USED ON LARGER DIAMETER PIPELINES IN LIEU OF BREAKING OUT LARGE HOLES IN PRECAST SECTIONS.

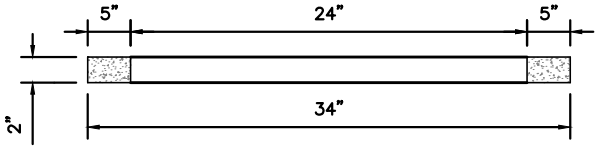

REINF. CONCRETE THROAT RING

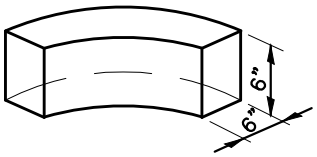

SEGMENTAL BLOCK

5'-0" DIA. – 15 BLOCKS FULL CIRCLE 4'-0" DIA. – 12 BLOCKS FULL CIRCLE

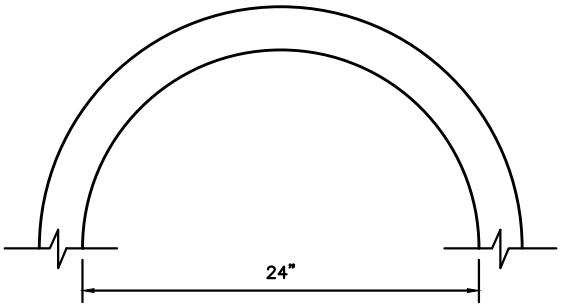

Dec 26, 2013 – 4:51PM

D-4

PRECAST CONCRETE MANHOLE DETAILS

SCALE: N.T.S.	REVISED: JAG
DATE: FEBRUARY, 2010	DRAWN BY: RMM/JAG

THE CITY OF EDINBURG
PUBLIC WORKS DEPARTMENT

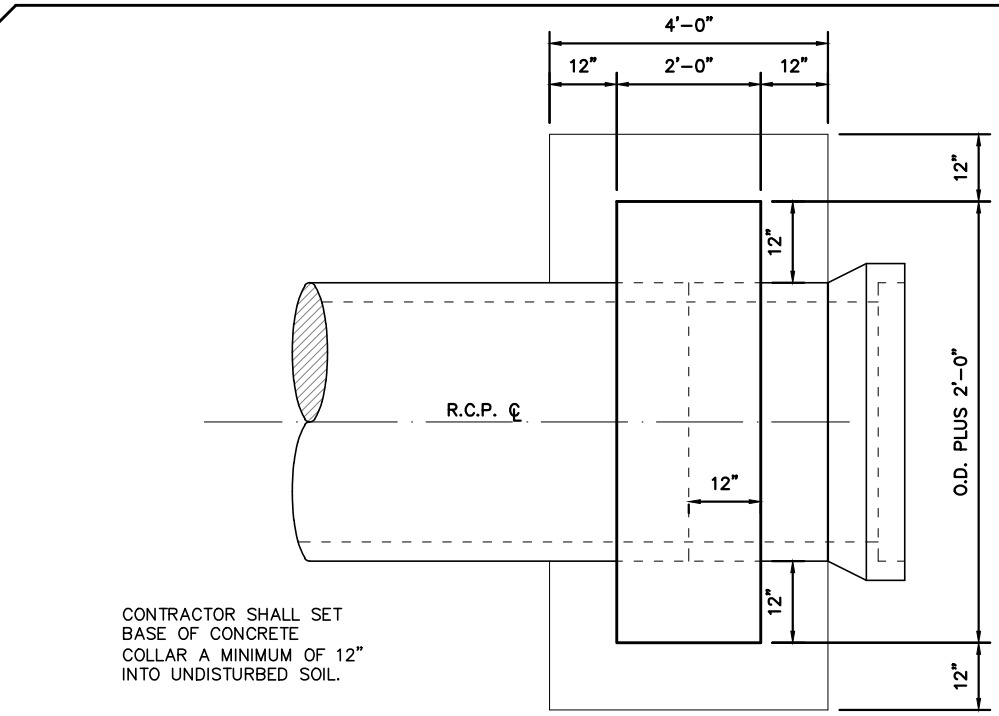

TOP VIEW

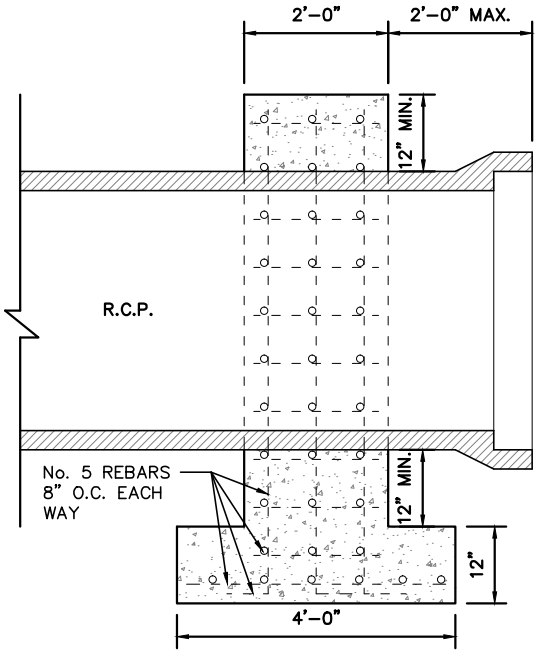

SIDE VIEW SECTION

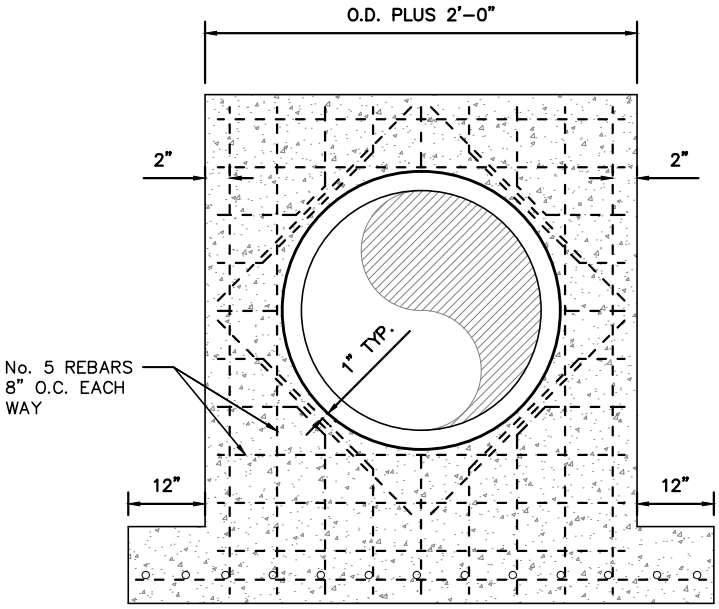

FRONT VIEW SECTION

CONCRETE PIPE SUPPORT COLLAR

D-5	CONCRETE PIPE SUPPORT COLLAR DETAILS	THE CITY OF EDINBURG PUBLIC WORKS DEPARTMENT
	SCALE: N.T.S.	REVISED: JAG
	DATE: FEBRUARY, 2010	DRAWN BY: RM

Dec 26, 2013 – 4:52PM

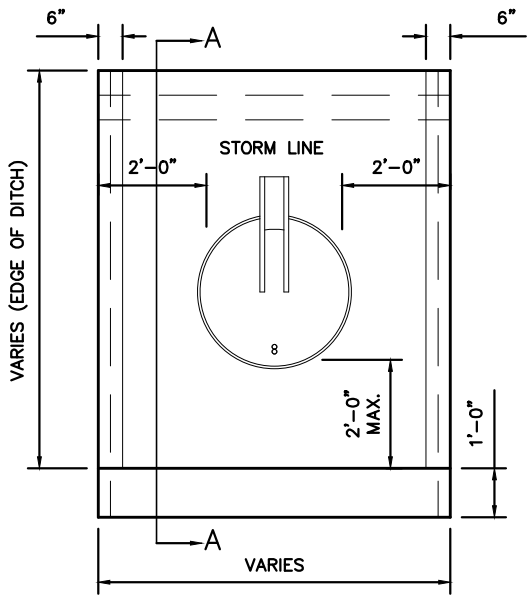

FRONT VIEW

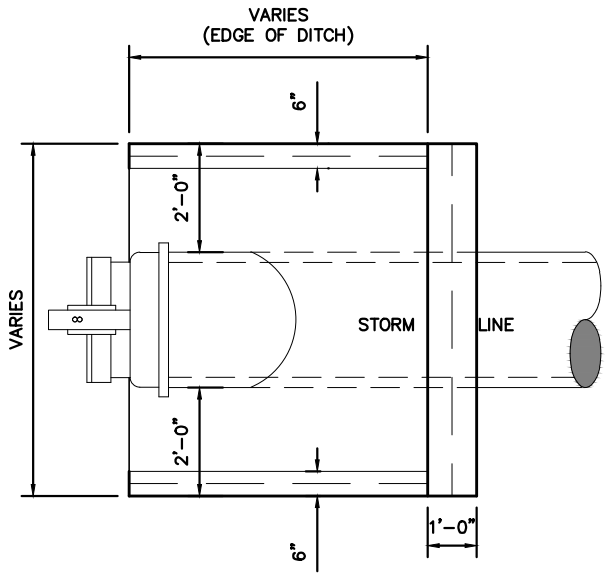

TOP VIEW

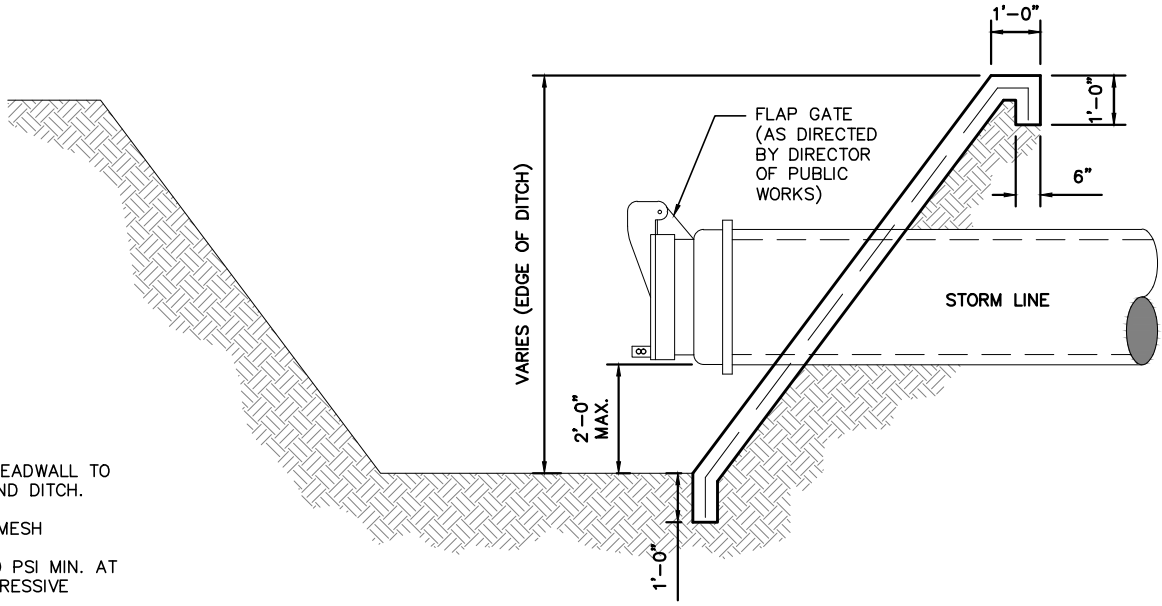

NOTE:

1. PROP. CONC. HEADWALL TO CONFIRM AROUND DITCH.
2. 6X6 #10 WIRE MESH
3. CONC. AT 3000 PSI MIN. AT 28 DAYS COMPRESSIVE STRENGTH.
4. MIN. 98% STD. COMPACTION NATURAL GROUND

SECTION A–A

DOWN DRAIN STRUCTURE

D-6	DOWN DRAIN STRUCTURE DETAILS		THE CITY OF EDINBURG PUBLIC WORKS DEPARTMENT
	SCALE: N.T.S.	REVISED: JAG	
	DATE: MARCH, 2014	DRAWN BY:	

Mar 10, 2014 – 2:18PM

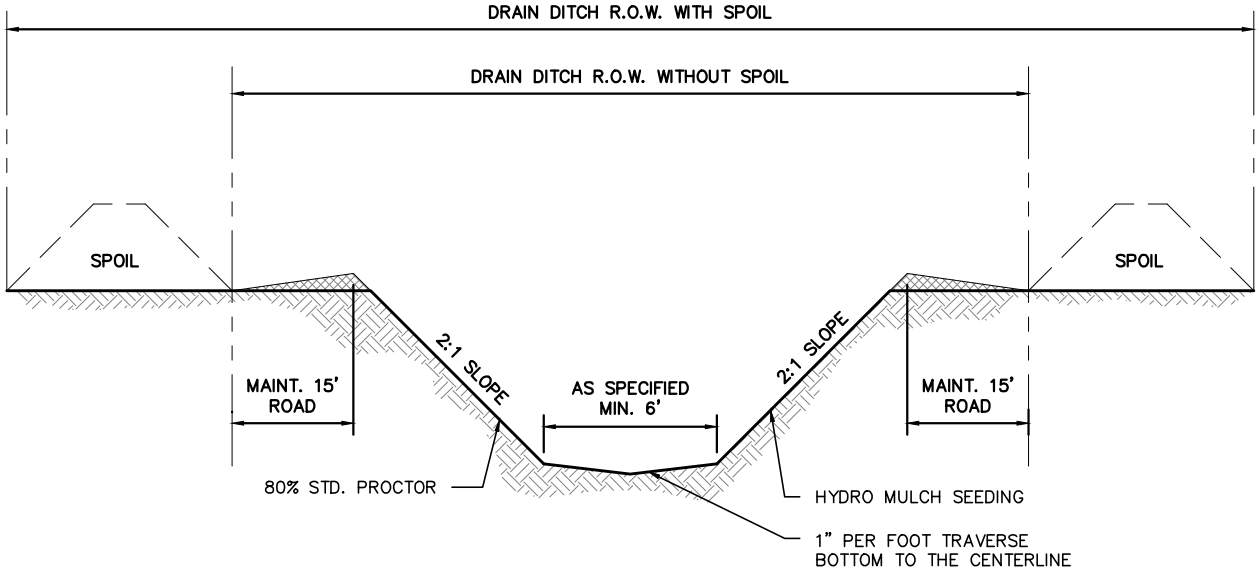

DITCH CROSS SECTION

NOTE;

ROW WIDTH TO BE DETERMINED BY DIRECTOR OF PUBLIC WORKS.

D-7	DITCH CROSS SECTION DETAIL		THE CITY OF EDINBURG PUBLIC WORKS DEPARTMENT
	SCALE: N.T.S.	REVISED: JAG/AB	
	DATE: FEBRUARY, 2010	DRAWN BY: JAG	

Mar 10, 2014 – 2:19PM

NOTE;

WHEN UTILITY LOCATED WITHIN CITY ROW, ALL BACKFILL IS SUBJECT TO INSPECTION, TESTING AND APPROVAL BY THE CITY ENGINEER'S OFFICE

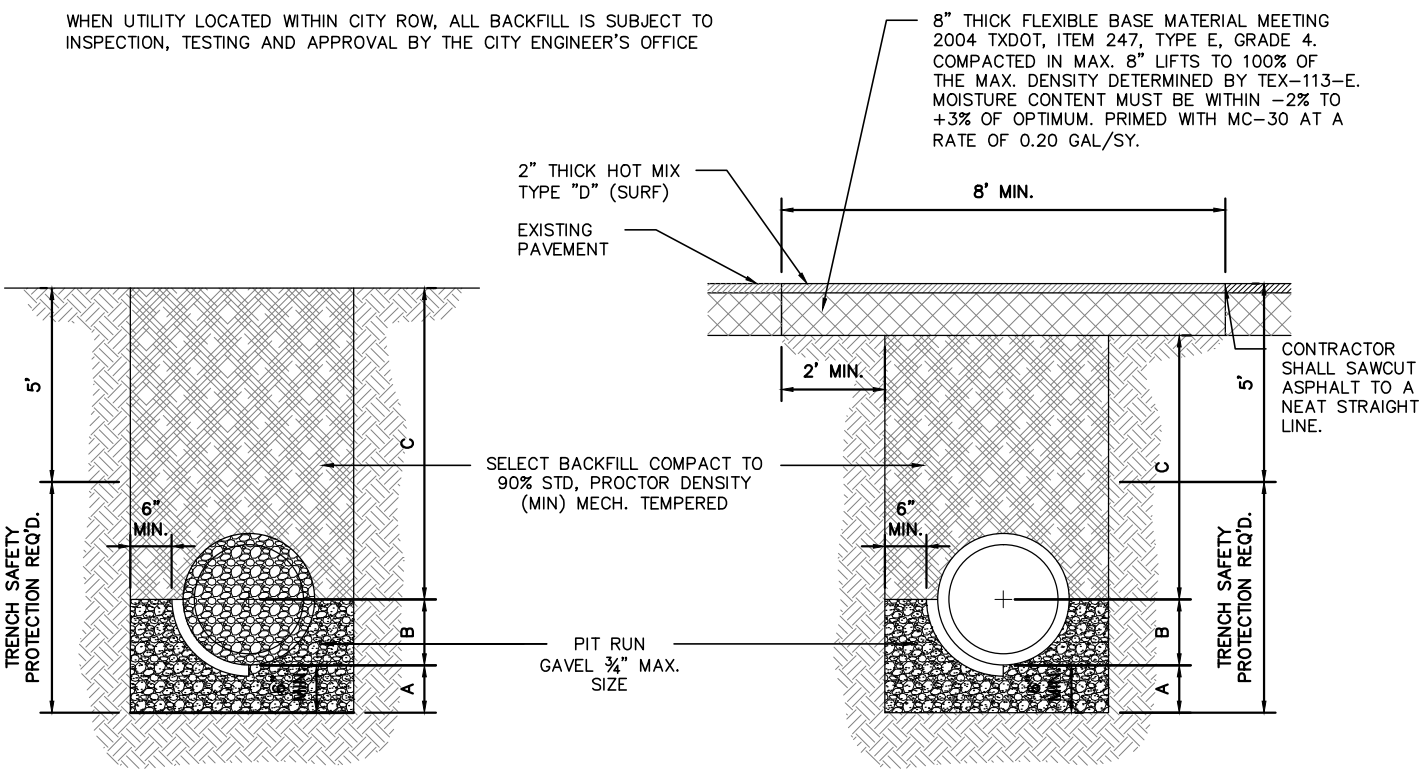

STANDARD PIPE BEDDING

A. GRAVEL (3/4" MAX. SIZE) BEDDING PLACED BEFORE PIPE IS LAID UP TO FLOW LINE OF PIPE. (MIN. THICKNESS = 6")

B. GRAVEL BACK FILL PLACED AFTER PIPE IS LAID FROM BOTTOM OF PIPE TO SPRING LINE OF PIPE. (4" LIFTS, MECH. TAMPED).

C. FILL TRENCH W/SELECT BACKFILL (PI<20), W/12" LIFTS COMPACT TO 95% STD. PROCTOR

FOUNDATION PREPARATION (WELLPOINTS, GRAVEL AND/OR CEMENT STABILIZATION, OR APPROVED SUBSTITUTE) SHALL BE REQUIRED WHEN TRENCH BOTTOM IS UNSTABLE.

BACK FILLING AT STRUCTURES SHALL BE PLACED IN UNIFORM LAYERS, MOISTENED AS REQUIRED TO APPROXIMATE OPTIMUM MOISTURE CONTENTS AND COMPACTED TO 95% STANDARD PROCTOR DENSITY. THE THICKNESS OF EACH LOOSE LAYER SHALL BE SAND, APPROVED SITE SOIL OR OTHER APPROVED SUBSTITUTE.

STANDARD PIPE BEDDING

UNDER EXISTING PAVEMENT OR PROP. PAVEMENT

A. GRAVEL (3/4" MAX. SIZE) BEDDING PLACED BEFORE PIPE IS LAID UP TO FLOW LINE OF PIPE. (MIN. THICKNESS = 6")

B. GRAVEL BACK FILL PLACED AFTER PIPE IS LAID FROM BOTTOM OF PIPE TO SPRING LINE OF PIPE. (4" LIFTS, MECH. TAMPED).

C. FILL TRENCH W/SELECT BACKFILL (PI<20), W/12" LIFTS COMPACT TO 95% STD. PROCTOR

FOUNDATION PREPARATION (WELLPOINTS, GRAVEL AND/OR CEMENT STABILIZATION, OR APPROVED SUBSTITUTE) SHALL BE REQUIRED WHEN TRENCH BOTTOM IS UNSTABLE.

BACK FILLING AT STRUCTURES SHALL BE PLACED IN UNIFORM LAYERS, MOISTENED AS REQUIRED TO APPROXIMATE OPTIMUM MOISTURE CONTENTS AND COMPACTED TO 95% STANDARD PROCTOR DENSITY. THE THICKNESS OF EACH LOOSE LAYER SHALL BE SAND, APPROVED SITE SOIL OR OTHER APPROVED SUBSTITUTE.

NOTE;

ALL EXISTING STREET CROSSING SHALL REQUIRE SAND BACKFILL OF ENTIRE TRENCH

D-8	STANDARD PIPE BEDDING DETAILS		THE CITY OF EDINBURG PUBLIC WORKS DEPARTMENT
	SCALE: N.T.S.	REVISED: JAG/AB	
	DATE: FEBRUARY, 2010	DRAWN BY: JAG	

Dec 26, 2013 – 4:54PM

NOTE;

WHEN UTILITY LOCATED WITHIN CITY ROW, ALL BACKFILL IS SUBJECT TO INSPECTION, TESTING AND APPROVAL BY THE CITY ENGINEER'S OFFICE

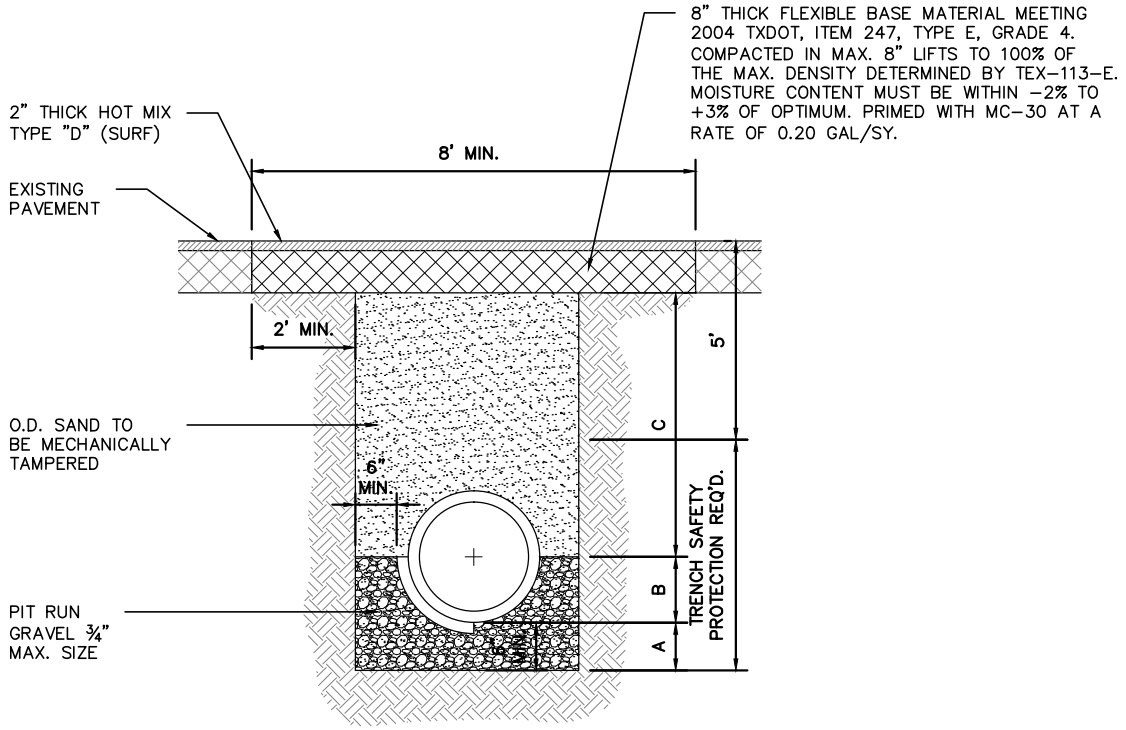

STANDARD PIPE BEDDING (MAIN ONLY)

UNDER EXISTING PAVEMENT OR PROP. PAVEMENT

A. GRAVEL (¾" MAX. SIZE) BEDDING PLACED BEFORE PIPE IS LAID UP TO FLOW LINE OF PIPE. (MIN. THICKNESS = 6")

B. GRAVEL BACK FILL PLACED AFTER PIPE IS LAID FROM BOTTOM OF PIPE TO SPRING LINE OF PIPE. (4" LIFTS, MECH. TAMPED)

C. FILL TRENCH WITH SAND (12" LIFTS, MECH. TAMPED).

FOUNDATION PREPARATION (WELLPOINTS, GRAVEL AND/OR CEMENT STABILIZATION, OR APPROVED SUBSITITUTE) SHALL BE REQUIRED WHEN TRENCH BOTTOM IS UNSTABLE.

BACK FILLING AT STRUCTURES SHALL BE PLACED IN UNIFORM LAYERS, MOISTENED AS REQUIRED TO APPROXIMATE OPTIMUM MOISTURE CONTENTS AND COMPACTED TO 95% STANDARD PROCTOR DENSITY. THE THICKNESS OF EACH LOOSE LAYER SHALL BE SAND, APPROVED SITE SOIL OR OTHER APPROVED SUBSITITUTE.

(STORM SEWER)

D-9	UTILITY CROSSING AT EXISTING ACTIVE STREET DETAIL (STORM SEWER)	THE CITY OF EDINBURG PUBLIC WORKS DEPARTMENT
	SCALE: N.T.S. / REVISED: JAG/AB	
	DATE: FEBRUARY, 2010 / DRAWN BY: RM	

Dec 26, 2013 – 4:54PM

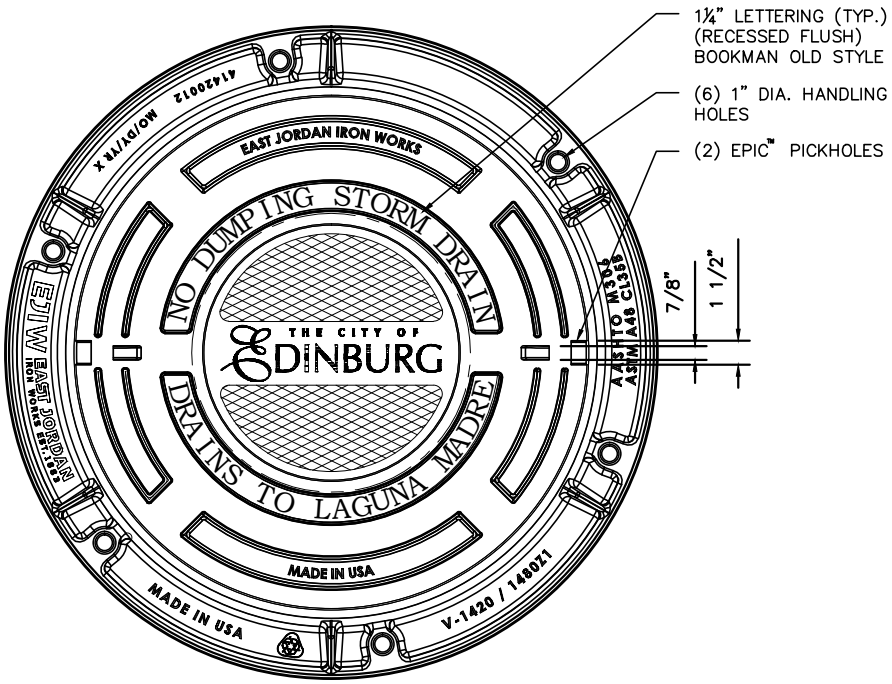

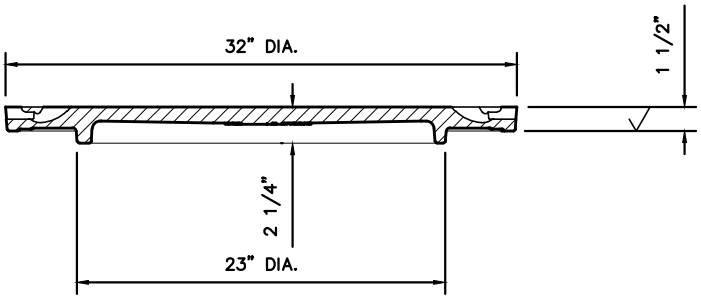

COVER SECTION

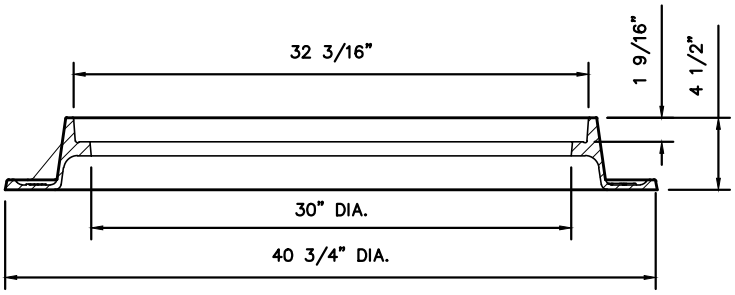

FRAME SECTION

CITY STANDARD ROADWAY MANHOLE RING AND COVER CASTING DETAIL

D-10	MANHOLE COVER DETAILS		THE CITY OF EDINBURG PUBLIC WORKS DEPARTMENT
	SCALE: N.T.S.	REVISED: JAG/AB	
	DATE: DECEMBER, 2013	DRAWN BY: RMM/JAS	

Dec 27, 2013 – 3:38PM

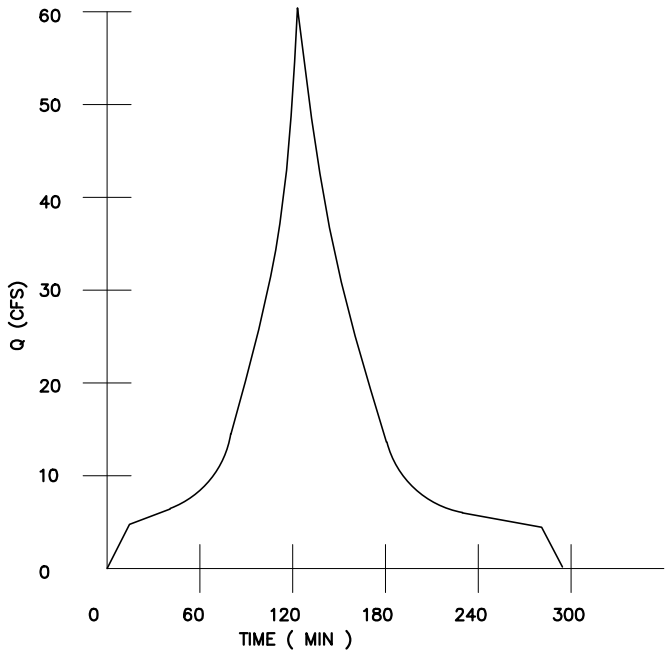

FIGURE I–iii TYPICAL VARIABLE RAINFALL INTENSITY METHOD STORM WATER RUNOFF HYDROGRAPH.

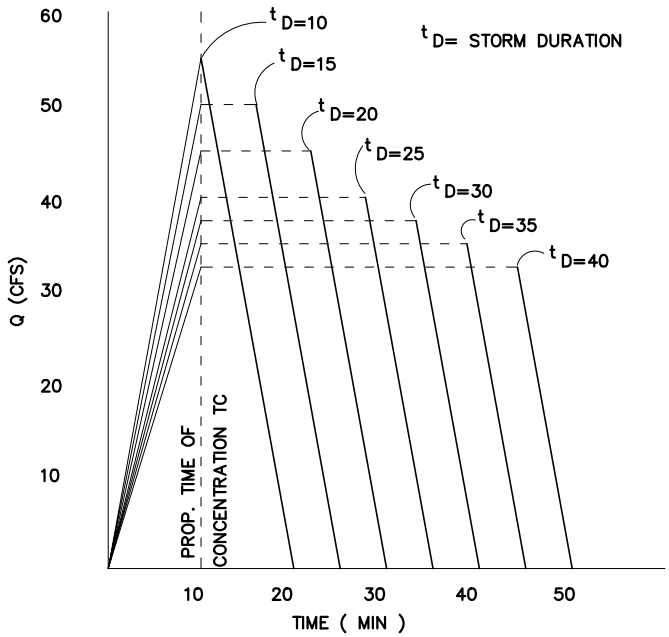

FIGURE I–iv TYPICAL RATIONAL METHOD STORM WATER RUNOFF HYDROGRAPH.

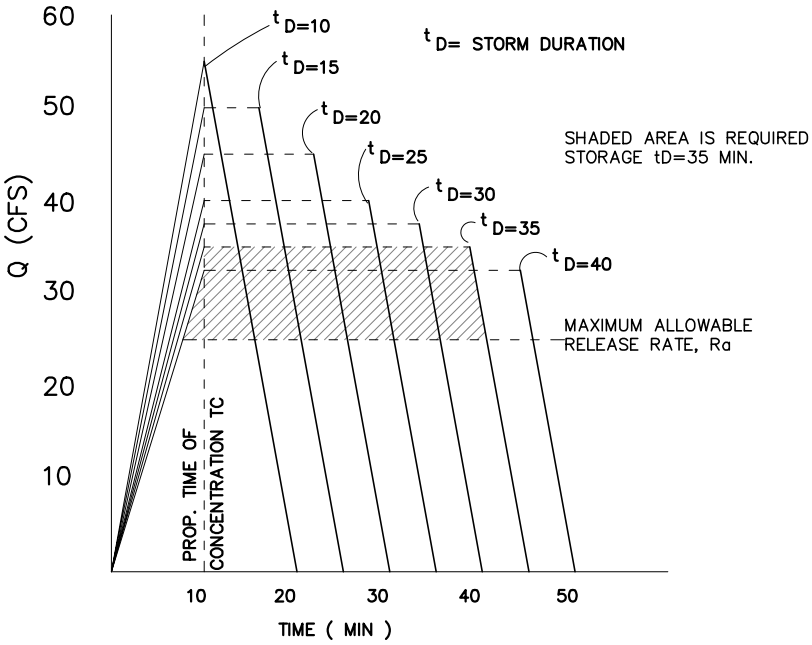

FIGURE I–v TYPICAL MODIFIED RATIONAL METHOD STORM WATER RUNOFF HYDROGRAPH. STORAGE CALCULATION BY PEAK SHAVING

D-11	STORM WATER RUNOFF	THE CITY OF EDINBURG PUBLIC WORKS DEPARTMENT
	SCALE: N.T.S.	REVISED: JAG
	DATE: FEBRUARY, 2010	DRAWN BY: RM

Dec 26, 2013 – 4:55PM

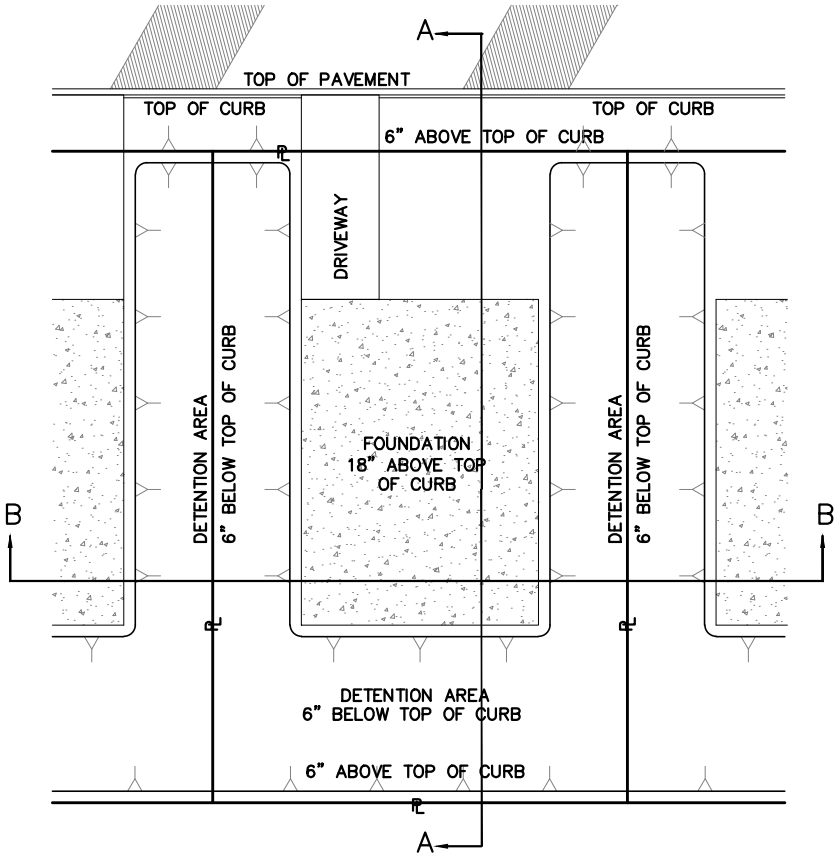

PLAN VIEW

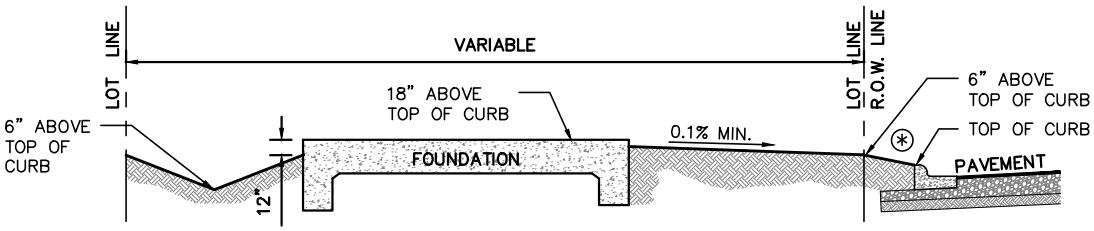

SECTION A–A

⊛ SEE SIDEWALK DETAILS FOR NEW SIDEWALK.

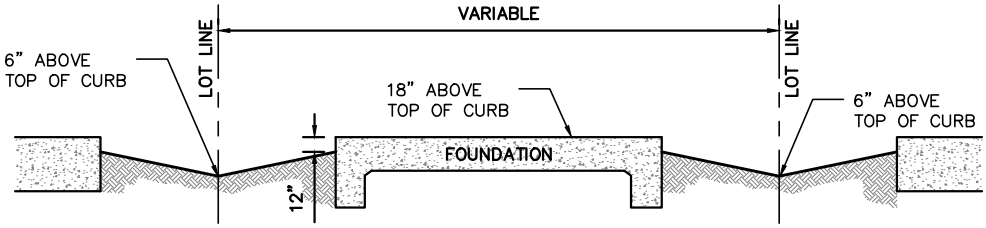

SECTION B–B

TYPICAL LOT LAYOUT GRADING DETAILS

D-12	LOT LAYOUT GRADING DETAILS		THE CITY OF EDINBURG PUBLIC WORKS DEPARTMENT
	SCALE: N.T.S.	REVISED: JAG	
	DATE: MARCH, 2014	DRAWN BY: RM	

Mar 10, 2014 – 2:20PM

This Page Intentionally Left Blank

SECTION 2 - STREETS AND ROADWAYS POLICY

2.01 General:
2.02 Master Plan:
- A. General Policies
- B. Right-of-Way and Paving Widths
- C. Standards for Private Roads
- D. Traffic Safety
- E. Street Lighting Standards
- F. Street Naming Standards
- G. Medians
- H. Cul-de-Sacs
- I. Alleys
- J. Curb & Gutter
- K. Sidewalks

2.03 Street Geometrics
- A. Street Intersections
- B. Corner Clips and Curb Radius
- C. Horizontal Curve Requirements
- D. Grades

2.04 Materials
- A. Hot Mix Asphaltic Pavements
- B. Prime Coat
- C. Tack Coat
- D. Flexible Base
- E. Cast-in-Place Concrete

2.05 Testing Requirements
2.06 Street Banners Standards
2.07 Standard Streets and Roadway Details
- P-1 Minor Residential Street Section Detail (32-ft. B-B / 50-ft. ROW)
- P-2 Minor Residential Street Section Detail (32-ft. B-B / 60-ft. ROW)
- P-3 Residential Collector / Multi-Family Street Section Details
- P-4 Collector Street Section Details
- P-5 Minor Arterial Street Section Details
- P-6 Principal Arterial Street Section Details
- P-7 Rural Street Section Details
- P-8 Curb and Gutter Details
- P-9 Valley Gutter Details
- P-10 Concrete Sidewalk Details
- P-11 Handicap Ramp Details
- P-12 Paving Drive Pad Details
- P-13 Pedestrian Facilities Ramps Types
- P-14 Pedestrian Facilities Sidewalk and Driveway
- P-15 Pedestrian Facilities Detectable Warnings
- P-16 Pedestrian Facilities Crossing Layout
- P-17 Median Detail
- P-18 Gated Entrance Detail
- P-19 Sidewalk Deviation at Fire Hydrant
- P-20 Sidewalk Rip-Rap
- P-21 ADA Sidewalk at Mail Box Details

P-22 Entrance Profile for Driveways w/out C&G
P-23 Typical Banner Detail

SECTION 2
STREETS AND ROADWAYS POLICY

2.01 General

The purpose of this section is to define the general requirements for the design of street and roadway improvements and to provide typical details of these improvements. The Director of Public Works and the City of Edinburg Public Works Department / Streets Division should be consulted if variations from these standards are anticipated. In general these sections are conditions on utility requirements adopted by the Code of Ordinances of the City of Edinburg specified in the **Unified Development Code**. In cases where limitations or physical barriers restrict compliance with the provisions of this section, adequate alternatives will be considered by the Director of Public Works/City Engineer.

2.02 Master Plan

All street and roadway designs must be sized and located according to the City's adopted Thoroughfare Plan and/or developed Areawide Conceptual Circulation Plan. The City of Edinburg will periodically amend its Thoroughfare Plan and the **Project Engineer must be familiar with the most current adopted plan.**

A. General Policies

1. All street designs must,

    a. Coordinate and align with other streets on existing subdivisions, other existing or planned streets, or with other features of the City;

    b. Conform to the general plan for the extension of roads, streets, alleys, access easements and public highways which have been or may be laid out by the City;

    c. Provide for the safe, efficient, and convenient movement of vehicular and pedestrian traffic;

    d. Distribute traffic which creates conditions favorable to health, safety, convenience, and prosperity within the City;

    e. Provide alternate travel routes to reduce potential impacts on street congestion;

    f. Match the community character of the respective district(s); and

    g. Respect natural resources, topography, and drainage.

2. Vehicular travel lanes, sidewalks and trails, and parking should be separated.

3. Access to Subdivisions (Public/Private):

   a. Less than 60 dwelling units: 1 access point.

   b. 60 – 120 dwelling units: 2 access points.

   c. More than 120 dwelling units: 2 access points, plus 1 access point per 60 units in excess of 120.

   d. The number of access points may reduced for multi-family development if it is demonstrated to the Director of Public Works that the access provided is,
      i. Adequate for the delivery of City services and emergency response; and
      ii. Safe and efficient traffic circulation is provided.

   e. The Director of Public Works may require an increased number of access points if, due to unusual characteristics of a site or adjacent streets, such additional access is necessary to ensure safe and adequate sanitation, public school transportation, and emergency response.

4. Block Length.

   a. May not exceed 9 lots on one side of the street.

   b. Attached units on individual lots may not exceed 15 lots or 15-unit footprints.

   c. No block may exceed 800-feet in length.

5. Lots may only access internal lot streets on double frontage lots.

6. Corner lots may only access the street with lesser classification or lesser traffic.

B. <u>Right-of-Ways and Paving Widths</u>

1. Streets, alleys, and other rights-of-way within proposed developments shall be appropriately dedicated for the purposes they are intended to serve.

2. Developer shall dedicate right-of-way width sufficient to make the full right-of-way width conform to either the right-of-way standards or to the adopted thoroughfare plan, whichever provides for a wider pavement section.

3. The Director of Public Works shall make the final determination of whether to require the construction of the additional pavement section or require a deposit an amount equal to the cost of the improvements.

4. Improvements, whether constructed or funds deposited shall include the pavement of an amount necessary to make the full pavement width comply with either the right-of-way standards or adopted thoroughfare plan, whichever provides for a wider pavement section and include the following;

a. Pavement shall conform to the standard specifications and in accordance with the appropriate street section detail, including curb and gutter and drainage.

b. Any extension of existing pavement shall require a cutback of a minimum of two feet to assure adequate sub-base and pavement joint.

5. The City may pay, provided funds are available, for street right-of-way or paving in excess of that set out in the City's adopted Thoroughfare Plan, except where such extra widths are in commercial developments, or where they are not required by the City.

6. Street Standards

a. The following shall govern all street construction, except with regard to State Highways, which shall meet Texas Department of Transportation (TxDOT) specifications:

Street Standards		
Right-of-Way Width	**Paving Width**	**Paving Section**
50-ft. (w/5-ft. U.E.) Minor (60-ft. with street trees)	32-ft. B-B (18" C&G)	*6-inch Subgrade 8-inch Flexible Base 2-inch HMAC
60-ft. Residential Collector	43-ft. B-B (18" C&G) 2 lanes (+) 2 park	*6-inch Subgrade 8-inch Flexible Base 2-inch HMAC
80-ft. Collector	57-ft. B-B (24" C&G) 2 lanes (+) 1 Cont. Left (+) 2 park	*8-inch Subgrade 10-inch Flexible Base 2-inch HMAC
100-ft. Minor Arterial	64-ft. B-B (24" C&G) 4 lanes (+) 1 Cont. Left	*10-inch Subgrade 12-inch Flexible Base 3-inch HMAC
120-ft. Principal Arterial	81-ft. B-B (24" C&G) 4 lanes (+) 1 Cont. Left (+) 2 park	*10-inch Subgrade 12-inch Flexible Base 3-inch HMAC

- Travel lanes are 12-ft. wide and parking lanes are 9-ft. wide.
- Continuous Left (CL) and Occasional Left (OL) lanes are 14-ft. wide.
- Multi-family subdivisions shall be required to comply with residential collector street standards (43-ft. B-B minimum).
- C&G means curb and gutter on each side of the street.
- Treated Subgrade to be determined by a City approved Professional Engineered Geo-Technical Report.

b. Adjustments – The City shall require the street's design to minimize the disturbance of natural resources, including floodplains. Where additional right-of-way is needed to obtain vertical curve, grade, clear sight triangles, turn lanes, or medians, the required right-of-way shall be adjusted to the extent necessary in accordance with local needs as determined by the Planning and Engineering Department.

c. Half-Streets Prohibited – No half-streets shall be permitted in new subdivision plats.

d. Street Trees shall be required for streets that serve subdivisions with 16 lots or greater.

C. Standards for Private Roads

1. Private roads shall be constructed to the same standards as public streets.

2. The widths of the access easements for private roads shall be established at the same widths as would be required for public street right-of-way.

3. Permits and inspections that are required for construction of private roads shall be processed in the same manner as those for public streets.

4. Street lighting standards shall be the same as public streets.

5. Police, fire, sanitation, and other public vehicles shall be provided access. Access control devices shall meet regulations adopted by the City, including redundancy requirements. The description and specifications for the access control devices shall be submitted for approval with the final plat. The developer shall provide to the City all equipment necessary to operate the access control devices, as determined by the City and at no cost to the City.

6. Gates shall be of breakaway construction to allow for emergency passage of first-responder vehicles without damage to the vehicles.

7. An entry turnaround shall be provided between the gatehouse and the public street.

8. Guard houses and gates must be set back a minimum of 40 feet from projected public right-of-way in accordance with City's thoroughfare plan and provide access that is at least 18 feet in width and 14 feet in height. Clearance for construction equipment on trailers may be higher.

9. More than 40 feet setback may be required where the road serves more than 160 units, or as determined by The Director of Public Works.

10. The access between the guard house and the public street shall be an easement of 60 feet in width and a pavement width of 36 to 40 feet or as determined by The Director of Public Works.

D. Traffic Safety:

1. The Director of Public Works may require a traffic study to determine the impact of the proposed development on existing infrastructure.

2. The traffic study must be performed by a licensed professional engineer qualified to perform such work.

3. Off-site improvements or modifications may be required to address identified demands of the proposed development which may include, but are not limited to, traffic signal installations, additional signage, pavement markings, access control structures, deceleration lanes, or modification of access locations.

4. Developer shall provide a street sign layout in accordance with the Texas Manual for Uniform Traffic Control Devices (TMUTCD), latest edition, for approval by the Director of Public Works *and* deposit sufficient funds to provide for the materials and installation of such street signs.

5. Traffic Calming measures may be required by the Director of Public Works on Minor Residential and Residential Collector Streets that;

   a. Serve 92 or more residential units (or are otherwise demonstrated to carry volumes of traffic in excess of 100 vehicles per hour during peak hours), and have a straight or relatively straight alignment for a distance of 500 feet or more; or

   b. Are configured or connected in such a way that they are likely to be attractive as a short cut to avoid congested intersections or difficult turn movements.

   c. Traffic calming options that may be required include;

      i. Intersection throttling curbs.
      ii. Islands at intersections.
      iii. Pavement changes.
      iv. Elevated pedestrian crossings.
      v. Islands in straight sections.
      vi. Interruption in parking lanes.
      vii. Altering of the curve radii to preserve large trees.

6. Sight Distance Requirements

   a. Shall include the triangular area formed by the right-of-way lines of intersecting streets and a line connecting points 25 feet on either side of such intersecting rights-of-way, including triangles formed from centerlines of driveways, there shall be clear space and no obstruction to vision.

   b. No persons shall place or maintain any structures or fences, landscaping, or other objects within any sight distance triangle that obstructs or obscures site distance visibility by more than 25 percent of the area between the ground and eight feet, except for the following:

      i. Landscaping, structures, or fences that protrude no more than 30 inches above the adjacent roadway surface may be permitted within the sight distance triangle.
      ii. Trees may be planted and maintained within the sight distance triangle if all branches are trimmed to maintain a clear vision for a vertical height of 96 inches above the roadway surface and the location of the trees planted, based on the tree species' expected to mature height and size, does not obstruct sight visibility by more than 25 percent of the sight distance triangle.

E. <u>Street Lighting Standards</u>

1. Street lighting shall be installed as provided in accordance with the following:

Street Lighting Standards				
Street Type	**Fixture Type**	**Luminosity (Lumens)**	**Min. Spacing**	**Max. Spacing**
Arterial or Principle Arterial	High-pressure sodium vapor	27,500	200 feet	250 feet
Residential Collector	High-pressure sodium vapor	27,500	250 feet	300 feet
Minor Residential, Option 1	High-pressure sodium vapor	27,500	N/A	400 feet
Minor Residential, Option 2	High-pressure sodium vapor	27,500	200 feet	250 feet

2. The Director of Public Works shall review street lighting plans for compliance with these standards.

3. The developer shall provide information demonstrating provisions have been made with the electric provider for the subdivision prior to recording of the subdivision plat.

4. Street lights shall be installed at all intersection, at cul-de-sacs, and at such other location as deemed necessary by the Director of Public Works within the proposed subdivision and along streets adjacent to the subdivision.

5. The Cost of streetlight improvements shall be incurred by the subdivider or developer.

6. Existing streetlights within the subdivision or along streets adjacent to the subdivision shall be upgraded to the appropriate luminary level reflective of the street's classification during the platting review and approval process and at the building permit issuance stage.

F. Street Naming Standards

1. Street names shall be selected by the City according to a set of conventions that facilitates way finding and efficient emergency response.

2. Names of new streets shall not duplicate or cause confusion with the names of existing streets, unless the new streets are in continuation of or in alignment with existing streets, in which case names of existing street shall be used.

3. Names of new streets shall not duplicate the names of subdivisions unless they are located exclusively within the subdivision after which they are named.

G. Medians

1. Medians that are part of a dedicated public right-of-way may not be utilized for any purpose other than by the City of a public utility.

2. A developer or other entity may beautify a median in public right-of-way with landscaping with the approval of the Administrator and/or Planning and Zoning Commission provided that:

   a. It does not interfere with existing or proposed public utilities;

   b. It conforms to the sight distance requirements of this section; and

   c. The applicant has submitted documentation with regard to the entity that will have permanent responsibility for maintenance of and liability for such improvements.

H. Cul-de-sacs

1. May be used under the following conditions:

   a. Natural resources, such as floodplains or open space, or irrigation district canals make standard blocks inefficient;

   b. Cul-de-sac streets serve no more than 20 lots or are no more than 600 feet in length, whichever results in a shorter street segment; and

   c. The pedestrian circulation system provides for direct, non-vehicular access between cul-de-sac ends where:
      i. Two lots or fewer are situated between them; and
      ii. The distance between them, measured along street centerlines, is more than 650 feet.

2. Cul-de-sacs shall have a minimum radius of 50-feet to the property line and 40-foot radius to the back of curb.

I. Alleys

1. May be used for primary of secondary vehicular access to lots and uses.

2. May not provide any access to property outside the boundaries in which they alleys are dedicated.

3. Shall be a minimum of 20 feet wide, with an 18 feet cartway.

4. A minimum structural section shall consist of 6” of Subgrade, 8” of Flexible Base, and 2” HMAC.

5. Shall intersect at right angles and be constructed as a standard approach with necessary valley gutters and in accordance with sight distance requirements.

6. Intersections between alley and street shall include a minimum curb radius of 30 feet to the inside edge of the alley paving with any additional area platted as part of the alley.

7. Turnouts shall be paved to the property line with turnouts not less than 20 feet wide.

8. Must be the same length as the blocks that provide frontage to the lots that the alleys serve.

9. No dead-end alley shall be permitted.

10. No cul-de-sac alley shall be permitted.

J. Curb and Gutter

1. All streets shall be constructed with standard concrete curb and gutter as shown in the street standards and detailed in this section;

2. Where the Director of Public Works has determined that a rural section is adequate given the existing conditions of adjacent streets, the developer must provide for the escrow deposit of the curb and gutter in lieu of construction.

3. May be required to prevent erosion of the pavement section.

K. Sidewalks

1. A sidewalk plan shall be submitted with the preliminary plat, development plat, and minor plat application and with the building permit application for un-platted property.

2. A sidewalk permit shall be filed with and reviewed for approval by The Director of Public Works in accordance with permit requirements in Chapter 98 of the Code of Ordinances.

3. Sidewalks should be constructed concurrent with street construction with special provisions to protect their condition and integrity during the process of building construction, unless the Planning and Zoning Commission allows otherwise under the following conditions:

   a. Sidewalk segments across individual lots will be constructed after buildings are constructed on the individual lots, but before they are occupied; and

   b. The timing and phasing of development will result in the completion of sidewalks on each street segment within 2 years of the date that building construction on the street segment is commenced.

4. Sidewalk requirements may be altered or waived if a sidewalk plan that provides equal or greater pedestrian circulation is submitted to and approved by the Planning and Zoning Commission under the following conditions:

   a. In suburban estate developments to allow off-street trails in lieu of sidewalks, thereby meeting the needs of walker and cyclists; or

   b. In order to implement the City's Parks and Recreation Master Plan.

5. Design Criteria The following design criteria shall be applicable to 5-foot and 6-foot concrete sidewalk designs and as shown in the standard details.

a. Sidewalk Width:
   i. Along Minor Residential, Residential Collector: 5-feet
   ii. Along Collector, Minor Arterial, Arterial, Principal Arterial, High-speed Principal Arterial and Freeway: 6-feet

b. Sidewalks must be provided in the area between the parkway and the edge of the right-of-way as shown in the in the standard details of this section.

c. Sidewalks may meander into the parkway to protect the root system of a mature tree, provided that no sidewalk may be located closer than three feet to the back of curb or edge of pavement if no curb is present.

d. Sidewalks shall also be installed in any pedestrian easements as may be required by the Planning Department - Unified Development Code (UDC).

e. Sidewalk alignment must match existing alignment in area or be set a minimum of 3-foot from back of curb.

f. Sidewalk shall slope from the backside toward the street with a maximum transverse slope of ¼ inch per foot (2%), 1-inch above the top of curb, and a maximum longitudinal slope of ½ inch per foot (5%).

g. Sidewalks and ramps shall be constructed of 4” thick concrete (3000 psi) reinforced with 6” x 6” No. 6 gage wire mesh, and No. 3 bars @ 12” on center each way (OCEW) or No. 4 @ 18” OCEW.

h. Bar-lift Plastic Chairs or approved equal shall be used exclusively to secure steel at center of concrete thickness.

i. Subgrade and 2” sand cushion shall be compacted to 90% standard proctor.

j. Contraction joints shall be scored every 6 feet and expansion joints every 30 feet.

k. Sidewalk shall have a non-slip broom finish transverse to the walkway. ***Exposed aggregate concrete shall not be permitted***.

l. Brick paver, tile, decorative or stamped concrete are not permitted within the right of way or within access easements for private streets except as follows:

   i. Sidewalks leading to the entrance of the residence (permit required).

   ii. Driveway leading to garage entrances of the residence (permit required).

m. Any permitted stained/colored decorative or stamped concrete must have color additive included in the mixture process. *Painted concrete shall not be permitted.*

n. All concrete shall be 5-sack concrete and shall have a minimum compressive strength of 3000 psi at 28-days.

o. Membrane curing compound shall be applied at a minimum of 1 gallon pre 180 square feet of area.

p. Handicap Ramps shall be place at all intersection with roadways or where required by State or Federal Law.

q. Flatwork is required to meet Texas Accessibility Standards (Texas Civil Statutes, Article 9102)

r. No admixtures to the concrete mix (i.e. fibermesh, plasticizers, etc.) shall be allowed without approval from the Director of Public Works.

2.03 Street Geometrics

A. Street Intersections

1. Intersection of more than two streets at one point is prohibited.

2. Streets shall intersect one another at approximately 90 degree angle.

3. No intersection of streets at angles less than 75 degrees shall be approved.

4. Offset street intersections shall be separated by a minimum centerline to centerline offset dimension of 150 feet.

5. The centerline to centerline distance may be reduced to no less than 75 feet if the Director of Public Works determines that the proposed offset will provide for comparable safety and efficiency of traffic movement, taking into consideration the existing and planned functional classification of the streets.

6. Variances by the Planning and Zoning Commission with regard to the angle of intersections may be granted giving due regard to terrain, sight distances, and safety *as recommended by the Director of Public Works*. A minimum of 25 feet radius shall be required at all approved acute angle intersections.

7. Subdivision Entrance Way

a. Subdivision entranceways that have a Minor Residential or Residential Collector street intersecting with an Arterial, or a street of higher classification, shall require the following:
   i. A minimum of 80 feet (ROW) in width by 140 feet in length;
   ii. Shall accommodate one entrance and two exit lanes;

iii. Gatehouses or architectural features that highlight the entrance are permitted in the median of a subdivision entranceway that meets these specifications.

B. Corner Clips and Curb Radius

1. The following corner clip and curb radii shall govern at all intersection of streets, except with regard to State Highways, which shall meet Texas Department of Transportation (TxDOT) specifications:

	(Corner Clip / Radius Dimensions)				
	Minor Residential (50' ROW)	**Residential Collector (60' ROW)**	**Collector (80' ROW)**	**Minor Arterial (100' ROW)**	**Principal Arterial (120' ROW)**
Minor Residential (50' ROW)	(15' / 20')	(20' / 20')	(30' / 25')	(40' / 30')	(50' / 35')
Residential Collector (60' ROW)	(20' / 20')	(20' / 25')	(30' / 30')	(40' / 35')	(50' / 40')
Collector (80' ROW)	(30' / 25')	(30' / 30')	(30' / 35')	(40' / 40')	(50' / 50')
Minor Arterial (100' ROW)	(40' / 30')	(40' / 35')	(40' / 40')	(40' / 50')	(50' / 50')
Principal Arterial (120' ROW)	(50' / 35')	(50' /40')	(50' / 50')	(50' / 50')	(50' / 50')

C. Horizontal Curve Requirements

1. Minor Residential streets must have a minimum radius at the centerline of 250 feet.

2. Residential Collector streets must have a minimum radius at the centerline of 700 feet;

3. Collector streets must have a minimum radius at the centerline of 1200 feet;

4. Minor Arterial and Principal Arterial shall be designed in accordance with the American Association of State Highway and Transportation Officials (AASHTO) "A Policy on Geometric Design of Highways and Streets", latest edition.

D. Grades

1. Minor residential streets may have a maximum grade of 10 percent.

2. Residential Collector streets may have a maximum grade of 7 1/2 percent.

3. Collector streets may have a maximum grade of 5 percent; unless the natural topography is such as to require steeper grades in which case 7 1/ 2 percent may be used for a maximum length of 200 feet.

4. Minor Arterial and Principal Arterial streets shall have the maximum grades determined by the Director of Public Works based on the natural topography of the area served.

5. All streets must have a minimum grade of at 0.2% slope or as directed by the Engineer.

6. Centerline grade changes with an algebraic difference of more than 2 percent shall be connected with vertical curves of sufficient length to provide a minimum of 600 feet sight distance on major streets; 400 feet sight distance on minor streets and local residential streets. No vertical curve shall be less than 200-feet in length if the algebraic grade change difference is 2 percent or more. If the algebraic difference is less than 2 percent, the minimum length of vertical curve must be 100 feet.

7. Wherever a cross slope is necessary or desirable from one curb to the opposite curb, such cross slope or curb split shall not exceed 6-inches in 31-feet.

2.04 Materials

Approved material listing is as follows. All deviations must be approved in writing by the Director of Public Works and upon approval by the City's Technical Specification Review Committee. All materials shall be new and in accordance with Standard Specifications.

A. Dense Graded Hot-Mix Asphalt Pavement shall be in accordance with Section 2612, "Dense-Graded Hot-Mix Asphalt".

   a. No seal coating of new construction will be allowed.

B. Prime Coat shall conform to Section 2610, "Prime Coat".

C. Tack Coat shall conform to Section 2577, "Asphalts, Oils and Emulsions".

D. Flexible Base shall conform to Section 2601, "Flexible Base".

E. Concrete used for rigid pavements shall have a 28-day compressive strength of 3,000 PSI in accordance with Section 03300, "Cast-in-Place Concrete".

2.05 Testing Requirements

Construction Materials Testing shall be performed by the City of Edinburg and shall be required at different stages of construction as follows:

1. Subgrade preparation: A minimum of one test per each 1000 square yards or fraction thereof of street area for subgrade compaction and depth. Additional testing may be required at the discretion of The Director of Public Works or his assigned representative.

2. Compacted Flexible Base: A minimum of one test per 1000 square yards or fraction thereof of street area from caliche compaction and depth. Additional testing may be required at the discretion of The Director of Public Works or his assigned representative.

3. HMAC: A minimum of one test per each 1500 square yards or fraction thereof of street area for thickness verification. Submittal of certified type grade from supplier shall be submitted for approval prior to delivery.

4. Concrete:

   a) Curb and Gutter--one set of cylinders (set consisting of 3) to be broken at 7 and 28 days with one space for every 1500 LF of curb and gutter;

   b) Concrete Pavement--one set of cylinders for every 1000 square yards, one beam for every 5000 square yards, slump and air for every 1000 square yards. A certified mix design from the supplier for every mix must be approved by The Director of Public Works.

5. It is the responsibility of the Developer or his Contractor to request construction materials testing from the City a minimum of 24 hours in advance. **Failure to follow appropriate testing frequency or procedures shall result in the removal of any improvements necessary verify compliance.**

6. All testing shall be covered by the Construction Materials Testing Fee collected from the Developer. Additional funds may be required to cover actual costs which must be paid prior to final acceptance of any subdivision.

2.06 <u>Street Banner Standards:</u>

This policy outlines the guidelines for the use and coordination of banner installation. The banner location shall be utilized for the purpose of advertising a community event designed for the general public's interest. Banners are managed by the City of Edinburg Department of Public Works for any and all city streets. For banners requested on along state roads are approved by the Texas Department of Transportation. The Department of Public Works is solely responsible to submitting the Texas Department of Transportation permit request.

To request the Banner:
Request the banner location in writing on your organization letter head; include the date, time, location, date of advertising, and items to be advertised. Please include the exact wording, and must include its dimensions as noted below.

STREET BANNER REQUIREMENTS

A. Scheduling:

1. Installation of banner shall be on a first-come, first-served basis and any city events will take priority. All banner requests must be submitted in writing through this policy/application and must be approved by the Director of Public Works or designee. Department of Public Works staff will schedule the banner for the

requested time and location, provided that there has not been a prior submission for the same date. If prior event has been scheduled for same location and time, staff will notify the new event of the prior approval, and will offer a new time and location no later than ten (10) working days of receipt of their request.

B. Restrictions:

1. Banners are allowed to be installed only at eight (8) locations as follows: four (4) locations on U.S. BUS. 281 (Closner Blvd.) and four (4) locations on S.H. 107 (University Dr.) upon availability.
2. Banners are allowed to be hung for the promotion of civic, charitable, or religious events only.
3. Banner shall be up for a maximum time of thirty (30) days. They shall be removed by the following business day, and can be installed starting at 9:00 a.m. on the day they are scheduled to be installed weather permitting.
4. If there is a prior application for installing a banner, the Director of Public Works, in his sole discretion, may deny permission to install any other banner during the same time frame.

C. Banner Specifications:
See P-20 Exhibit
Size:

Overall Length: 24 Ft. (Minimum) to 40 Ft. (Maximum)
Overall Height: 3½ Ft. (Minimum) to 4 Ft. (Maximum)

D. Banner Construction:

1. Mesh Material (mesh material will guarantee longer life of the banner due to less wind resistance and is required) is to be of a type that will withstand normal weather (wind and rain) conditions (NO EXECPTIONS).
2. Banner (top, bottom and both sides) is to have a finished hem to prevent wind tears.
3. A hemmed edge approximately two (2) inches wide is required at the top, bottom, and both sides of banner with metal eyelets installed on doubled material for the purpose of attaching the banner to the existing guide wires.
4. Grommets (protective eyelets) must be placed along the top edges of the banner and one at each bottom end. Grommets located at the bottom ends will have heavier reinforcing or other pre-approved method (i.e. D rings with reinforced nylon straps). The minimum grommet size shall be ½-inch (inside measurement), and the grommets shall be placed every twenty four (24) inches.

E. Installation of Banner:

1. Installation and removal of the banner shall be the sole responsibility of the Department of Public Works-Traffic Division.
2. Banner must be provided to the Department of Public Works five (5) days prior to the scheduled date of installation.
3. The use of the banner cables is subject to availability and condition of banner cables. If weather conditions pose a danger to the installation personnel or are a safety hazard, banner will not be installed until safe to do so.

2.07 Standards Streets and Roadway Details:

The following details show the adopted standards required by the City which are included at the end of this section:

TABLE OF DETAILS:

P-1	Minor Residential Street Section Detail (32-ft B-B / 50' ROW)
P-2	Minor Residential Street Section with Street Trees Detail (32-ft B-B / 60' (ROW)
P-3	Residential Collector / Multi-Family Street Section Detail
P-4	Collector Street Section Detail
P-5	Minor Arterial Street Section Detail
P-6	Principal Arterial Street Section Detail
P-7	Rural Paving Street Section Detail
P-8	Curb & Gutter Details
P-9	Valley Gutter Details
P-10	Concrete Sidewalk Details
P-11	Handicap Ramp Details
P-12	Paving Drive Pad Details
P-13	Pedestrian Facilities Ramps Types
P-14	Pedestrian Facilities Sidewalk at Driveway
P-15	Pedestrian Facilities Detectable Warnings
P-16	Pedestrian Facilities Crossing Layout
P-17	Median Detail
P-18	Gated Entrance Detail
P-19	Sidewalk Deviation at Fire Hydrant
P-20	Rip-Rap
P-21	ADA Sidewalk At Mailbox Detail
P-22	Entrance Profile for Driveways W/Out C&G
P-23	Typical Banner Detail

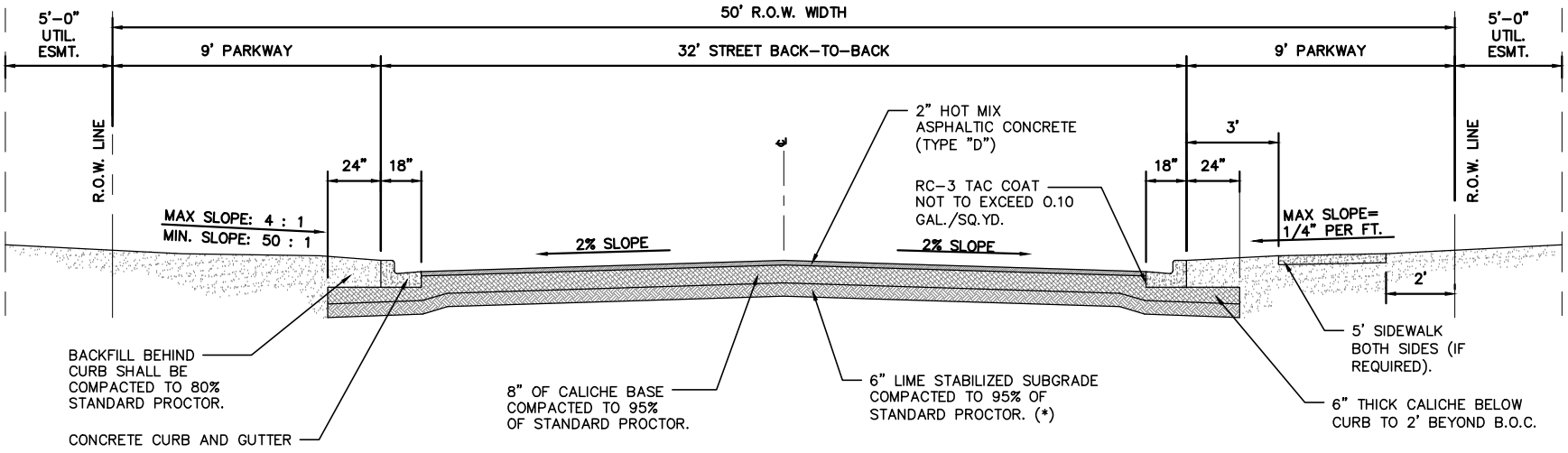

(*) TO BE DETERMINED BY GEO-TECHNICAL REPORT.

FLEXIBLE BASE (TYPE E GRADE 4) SHALL CONFORM TO THE FOLLOWING REQUIREMENTS , PRIOR TO THE ADDITION OF LIME:

Retained on Sg. Sieve	Percent Required
2"	0
½"	20 – 60
No. 4	40 – 75
No. 40	70 – 90
Max. PI:	15
Max. Wet Ball PI:	15
Wet Ball Mill Max Amount	50

NOTES:

1. IF AN ALTERNATIVE PAVEMENT SECTION IS REQUESTED, A PAVEMENT DESIGN ANALYSIS WILL BE REQUIRED FOR APPROVAL BY THE DIRECTOR OF PUBLIC WORKS.
2. FOR STREETS SERVING A SUBDIVISION WITH NO STREET TREES (LESS THAN 16 LOTS).

Mar 12, 2014 – 10:03AM

P-1

MINOR RESIDENTIAL STREET SECTION (32' BB – 50' ROW) – DETAIL

SCALE: N.T.S.	REVISED: JAG/PNL
DATE: MARCH, 2014	DRAWN BY: RMM/JAG

THE CITY OF EDINBURG
PUBLIC WORKS DEPARTMENT

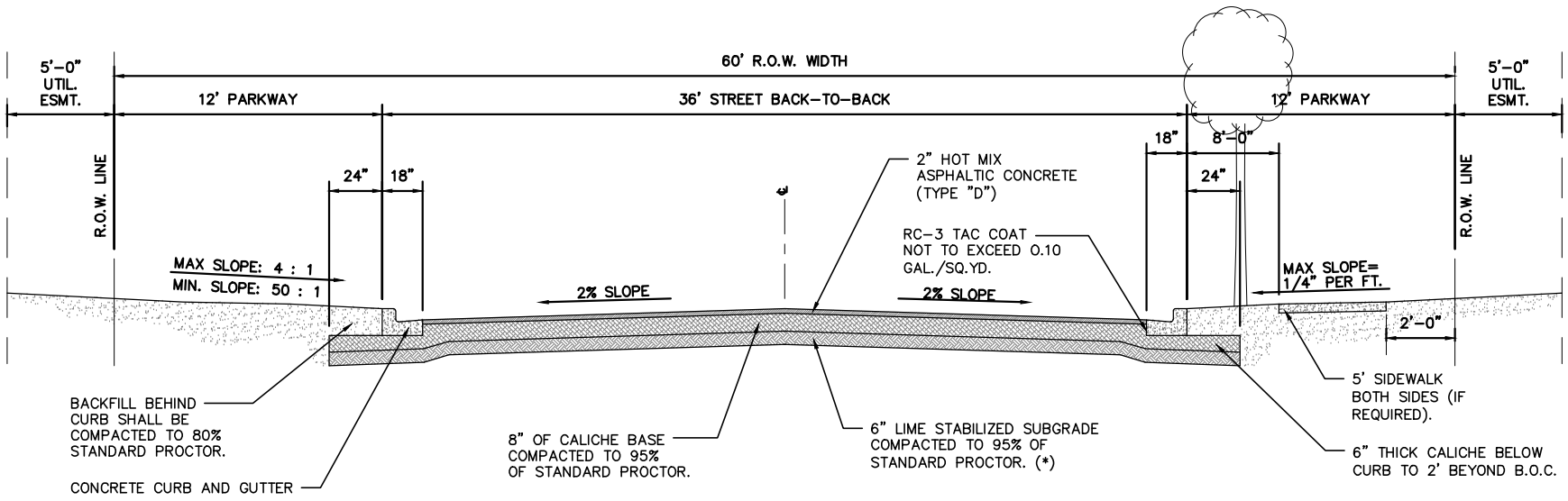

(*) TO BE DETERMINED BY GEO-TECHNICAL REPORT.

FLEXIBLE BASE (TYPE E GRADE 4) SHALL CONFORM TO THE FOLLOWING REQUIREMENTS , PRIOR TO THE ADDITION OF LIME:

Retained on Sg. Sieve	Percent Required
2"	0
½"	20 – 60
No. 4	40 – 75
No. 40	70 – 90
Max. PI:	15
Max. Wet Ball PI:	15
Wet Ball Mill Max Amount	50

NOTES:

1. IF AN ALTERNATIVE PAVEMENT SECTION IS REQUESTED, A PAVEMENT DESIGN ANALYSIS WILL BE REQUIRED FOR APPROVAL BY THE DIRECTOR OF PUBLIC WORKS.
2. FOR STREETS SERVING A SUBDIVISION WITH STREET TREES (16 OR MORE LOTS).

Mar 12, 2014 – 10:04AM

P-2

MINOR RESIDENTIAL STREET SECTION W/STREET TREES (36' BB – 60' ROW) – DETAIL

SCALE: N.T.S.	REVISED: JAG/PNL
DATE: MARCH, 2014	DRAWN BY: RMM/JAG

THE CITY OF EDINBURG
PUBLIC WORKS DEPARTMENT

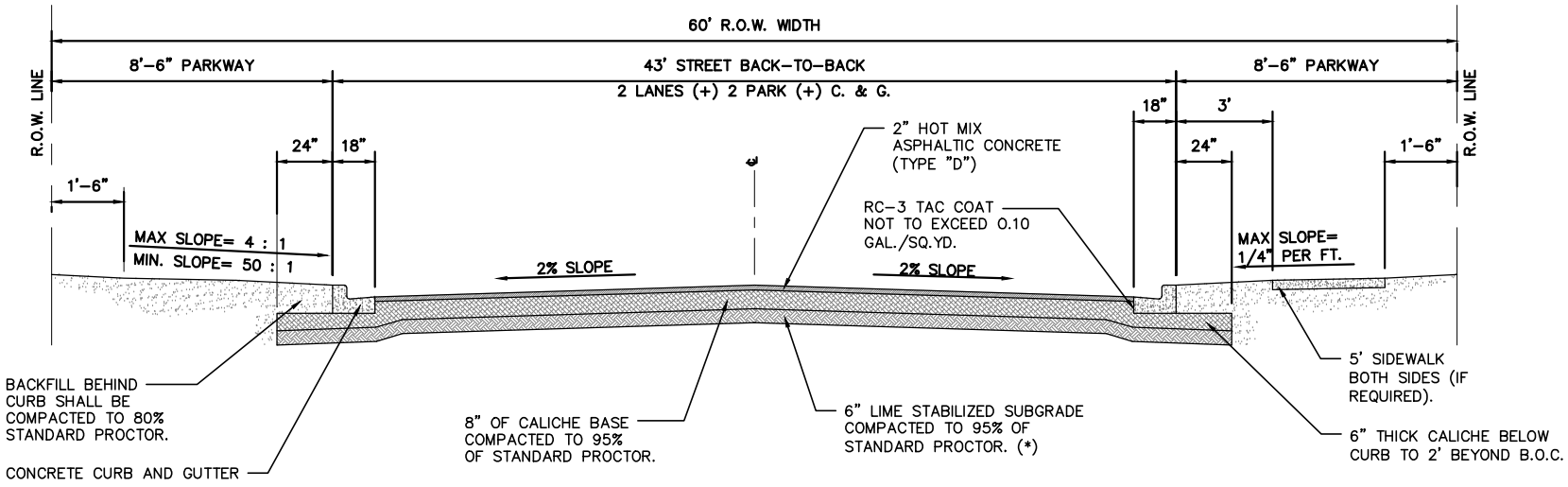

FLEXIBLE BASE (TYPE E GRADE 4) SHALL CONFORM TO THE FOLLOWING REQUIREMENTS , PRIOR TO THE ADDITION OF LIME:

Retained on Sg. Sieve	Percent Required
2"	0
½"	20 – 60
No. 4	40 – 75
No. 40	70 – 90
Max. PI:	15
Max. Wet Ball PI:	15
Wet Ball Mill Max Amount	50

(*) TO BE DETERMINED BY GEO-TECHNICAL REPORT.

NOTE:

IF AN ALTERNATIVE PAVEMENT SECTION IS REQUESTED, A PAVEMENT DESIGN ANALYSIS WILL BE REQUIRED FOR APPROVAL BY THE DIRECTOR OF PUBLIC WORKS.

Mar 12, 2014 – 10:05AM

P-3

RESIDENTIAL COLLECTOR AND MULTI-FAMILY STREET SECTION DETAIL

SCALE: N.T.S.	REVISED: JAG/PNL
DATE: MARCH, 2014	DRAWN BY: RMM/JAG

THE CITY OF EDINBURG
PUBLIC WORKS DEPARTMENT

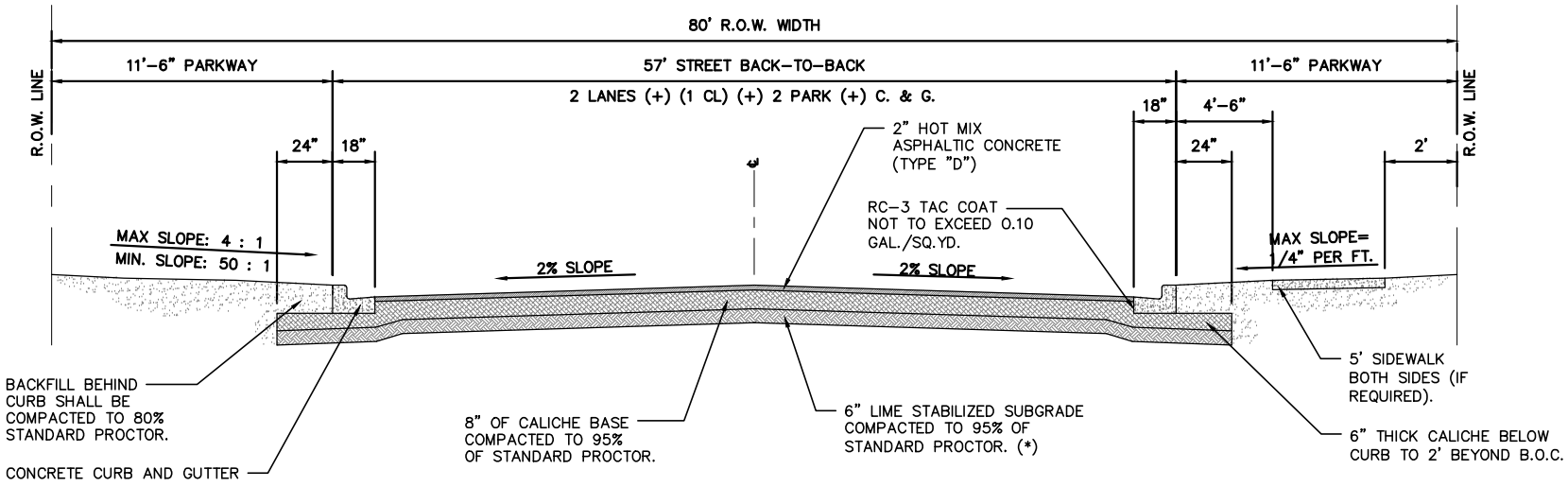

FLEXIBLE BASE (TYPE E GRADE 4) SHALL CONFORM TO THE FOLLOWING REQUIREMENTS , PRIOR TO THE ADDITION OF LIME:

Retained on Sg. Sieve	Percent Required
2"	0
½"	20 – 60
No. 4	40 – 75
No. 40	70 – 90
Max. PI:	15
Max. Wet Ball PI:	15
Wet Ball Mill Max Amount	50

(*) TO BE DETERMINED BY GEO-TECHNICAL REPORT.

NOTE:

IF AN ALTERNATIVE PAVEMENT SECTION IS REQUESTED, A PAVEMENT DESIGN ANALYSIS WILL BE REQUIRED FOR APPROVAL BY THE DIRECTOR OF PUBLIC WORKS.

Mar 12, 2014 – 10:05AM

P-4

COLLECTOR STREET SECTION DETAIL

SCALE: N.T.S.	REVISED: JAG/PNL
DATE: FEBRUARY, 2014	DRAWN BY: RMM/JAG

THE CITY OF EDINBURG
PUBLIC WORKS DEPARTMENT

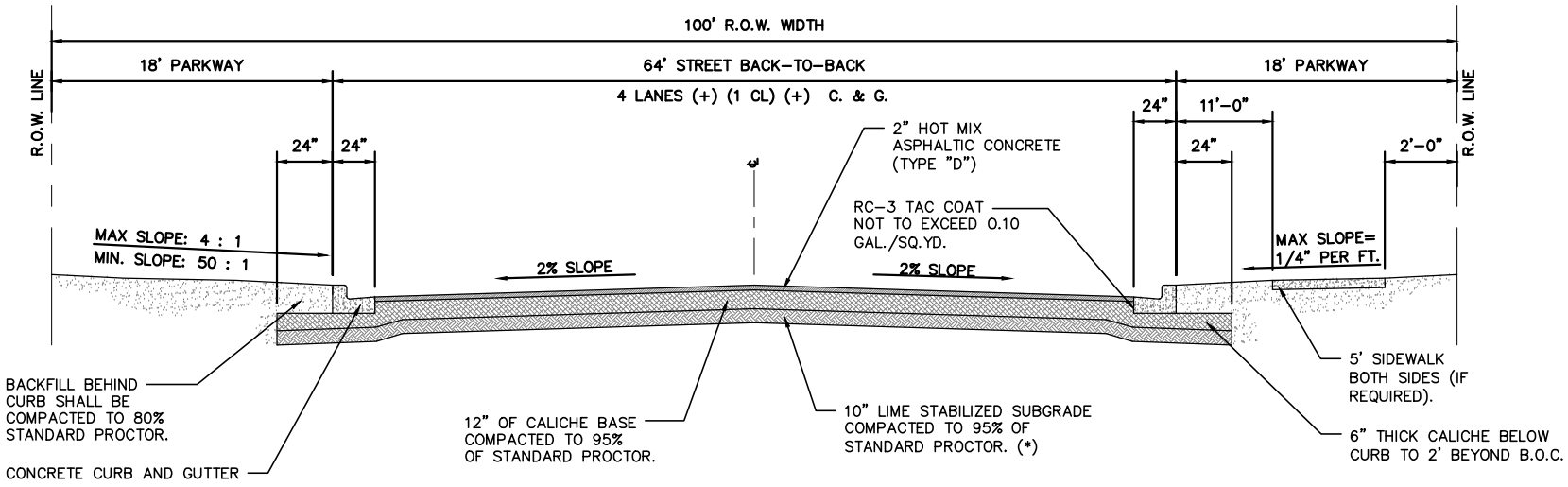

FLEXIBLE BASE (TYPE E GRADE 4) SHALL CONFORM TO THE FOLLOWING REQUIREMENTS , PRIOR TO THE ADDITION OF LIME:

Retained on Sg. Sieve	Percent Required
2"	0
½"	20 – 60
No. 4	40 – 75
No. 40	70 – 90
Max. PI:	15
Max. Wet Ball PI:	15
Wet Ball Mill Max Amount	50

(*) TO BE DETERMINED BY GEO-TECHNICAL REPORT.

NOTE:

IF AN ALTERNATIVE PAVEMENT SECTION IS REQUESTED, A PAVEMENT DESIGN ANALYSIS WILL BE REQUIRED FOR APPROVAL BY THE DIRECTOR OF PUBLIC WORKS.

Mar 12, 2014 – 10:06AM

P-5

MINOR ARTERIAL STREET SECTION DETAIL

SCALE: N.T.S.	REVISED: JAG/PNL
DATE: MARCH, 2014	DRAWN BY: RMM/JAG

THE CITY OF EDINBURG
PUBLIC WORKS DEPARTMENT

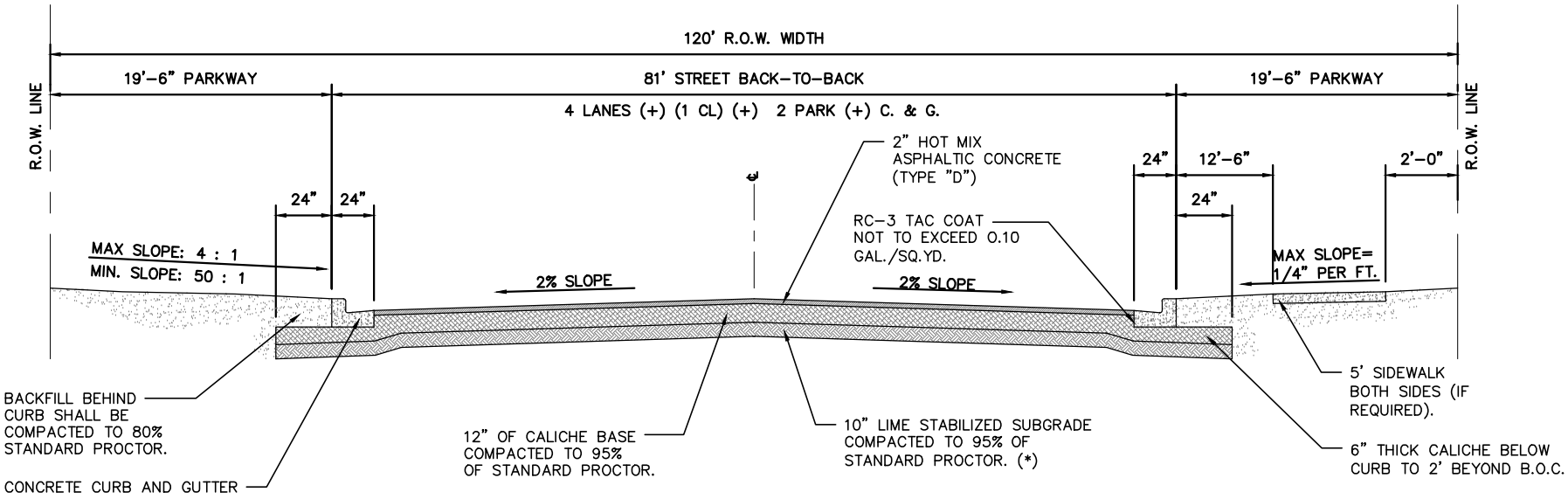

FLEXIBLE BASE (TYPE E GRADE 4) SHALL CONFORM TO THE FOLLOWING REQUIREMENTS , PRIOR TO THE ADDITION OF LIME:

Retained on Sg. Sieve	Percent Required
2"	0
½"	20 – 60
No. 4	40 – 75
No. 40	70 – 90
Max. PI:	15
Max. Wet Ball PI:	15
Wet Ball Mill Max Amount	50

(*) TO BE DETERMINED BY GEO-TECHNICAL REPORT.

NOTE:

IF AN ALTERNATIVE PAVEMENT SECTION IS REQUESTED, A PAVEMENT DESIGN ANALYSIS WILL BE REQUIRED FOR APPROVAL BY THE DIRECTOR OF PUBLIC WORKS.

Mar 12, 2014 – 10:08AM

P-6

PRINCIPAL ARTERIAL STREET SECTION DETAIL

SCALE: N.T.S.	REVISED: JAG/PNL
DATE: MARCH, 2014	DRAWN BY: RMM/JAG

THE CITY OF EDINBURG
PUBLIC WORKS DEPARTMENT

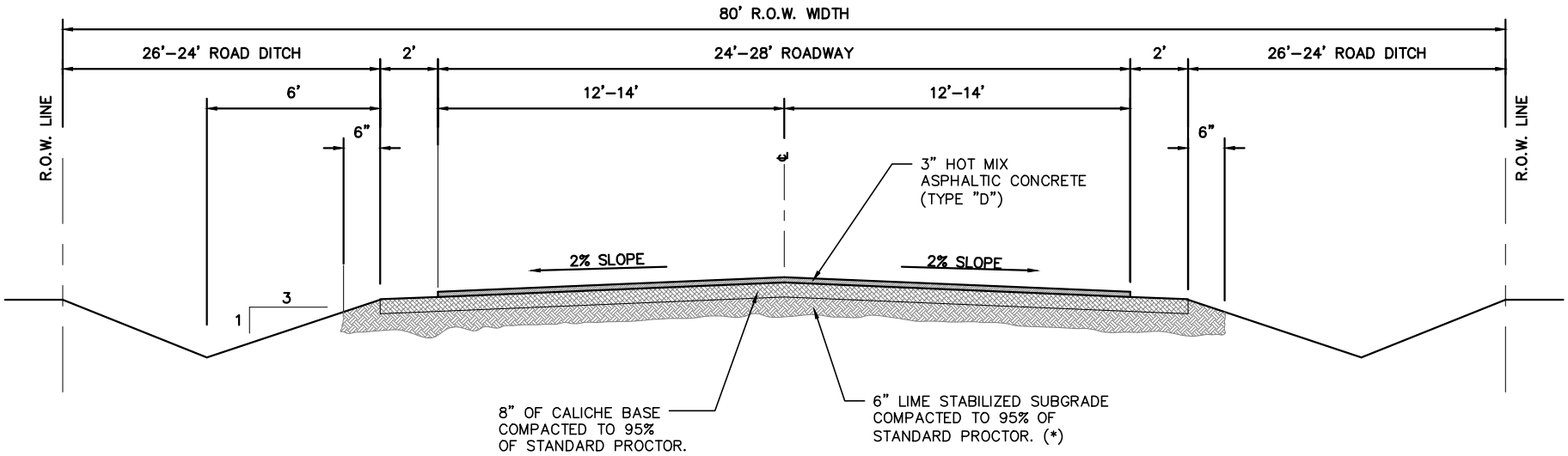

(*) TO BE DETERMINED BY GEO-TECHNICAL REPORT.

NOTE:

IF AN ALTERNATIVE PAVEMENT SECTION IS REQUESTED, A PAVEMENT DESIGN ANALYSIS WILL BE REQUIRED FOR APPROVAL BY THE DIRECTOR OF PUBLIC WORKS.

Mar 12, 2014 - 10:08AM

P-7

RURAL ARTERIAL STREET SECTION DETAIL

SCALE: N.T.S.	REVISED: JAG/PNL
DATE: MARCH, 2014	DRAWN BY: RMM/JAG

THE CITY OF EDINBURG
PUBLIC WORKS DEPARTMENT

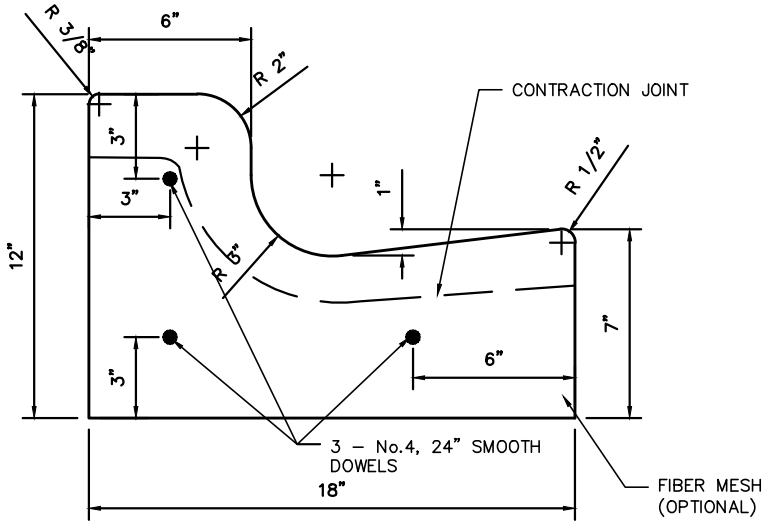

GENERAL NOTES:

1. CONCRETE SHALL BE 3000 PSI COMPRESSIVE STRENGTH AT 28 DAY
2. ALL CONCRETE WORK SHALL BE TREATED WITH MEMBRANE CURING COMPOUND TYPE 2 WHITE PIGMENTED ACCORDANCE WITH TEXAS DEPARTMENT OF TRANSPORTATION DEPARTMENTAL MATERIALS SPECIFICATIONS ITEM 4650. CONSIDERED INCIDENTAL TO CONCRETE WORK.
3. ½"EXPANSION JOINTS REQUIRED AT 40' C.C. AND AT THE BEGINNING AND END OF ALL RADII. CONTRACTION JOINTS SHALL NOT EXCEED 10' C.C.
4. EXPANSION JOINTS SHALL HAVE ½" EXPANSION JOINT MATERIAL AND 3 No.4 24" SMOOTH DOWEL BARS COATED TO PREVENT BOND.

CURB AND GUTTER DETAIL

NOT TO SCALE

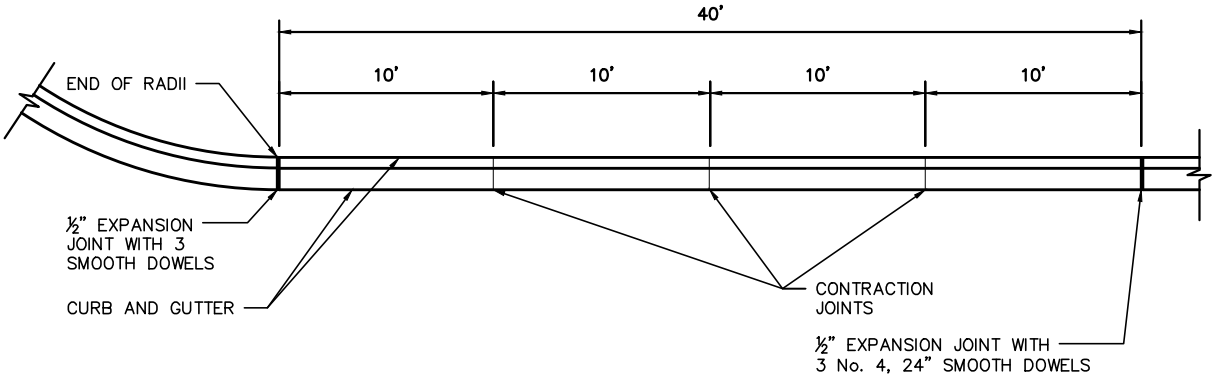

TYPICAL JOINTS

NOT TO SCALE

P-8	CURB AND GUTTER DETAILS		THE CITY OF EDINBURG PUBLIC WORKS DEPARTMENT
	SCALE: N.T.S.	REVISED: IP/PNL	
	DATE: MARCH, 2014	DRAWN BY: RMM	

Mar 12, 2014 – 10:10AM

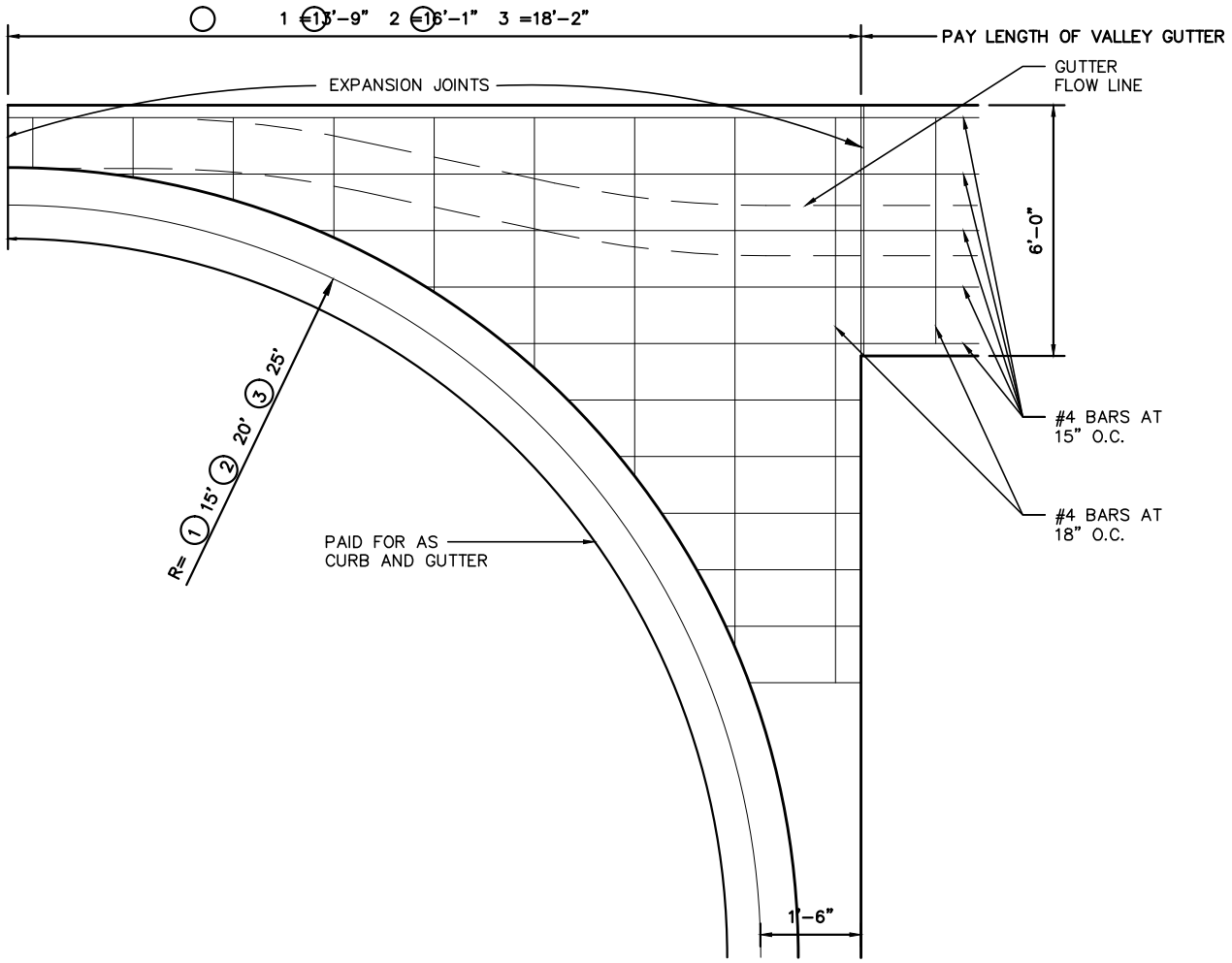

VALLEY GUTTER DETAIL

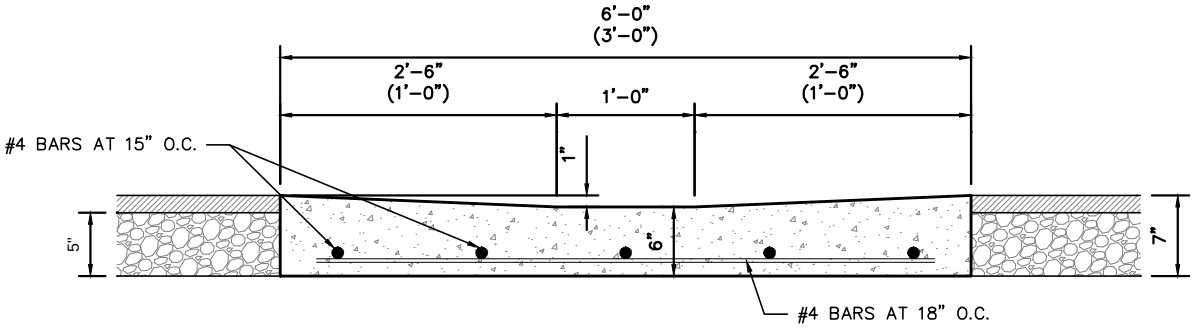

TYPICAL VALLEY GUTTER SECTION

P-9	VALLEY GUTTER DETAILS	THE CITY OF EDINBURG PUBLIC WORKS DEPARTMENT
	SCALE: N.T.S.	REVISED: I.P.
	DATE: DECEMBER, 2013	DRAWN BY: RMM

Dec 27, 2013 - 1:22PM

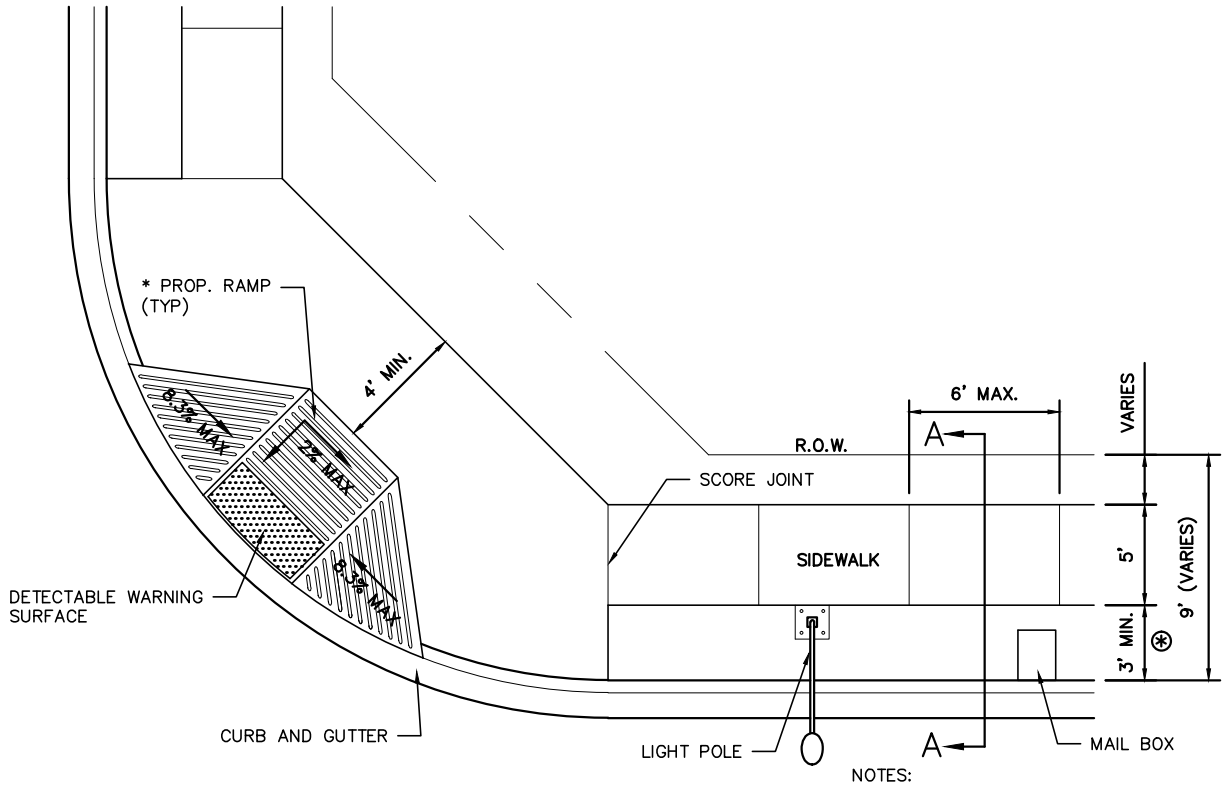

NOTES:

1. SCORE JOINTS ¼" THICKNESS OF SIDEWALK
2. EXPANSION JOINT EVERY 30'
3. JOINT IN CENTER OF SIDEWALK IF OVER 15' WIDE.

⊛ ANY OTHER DEVIATION SHOULD BE APPROVED BY DIRECTOR OF PUBLIC WORKS.

* NUMBER RAMPS AND RAMP TYPES MAY VARY WHERE PROPOSED.

PLAN VIEW

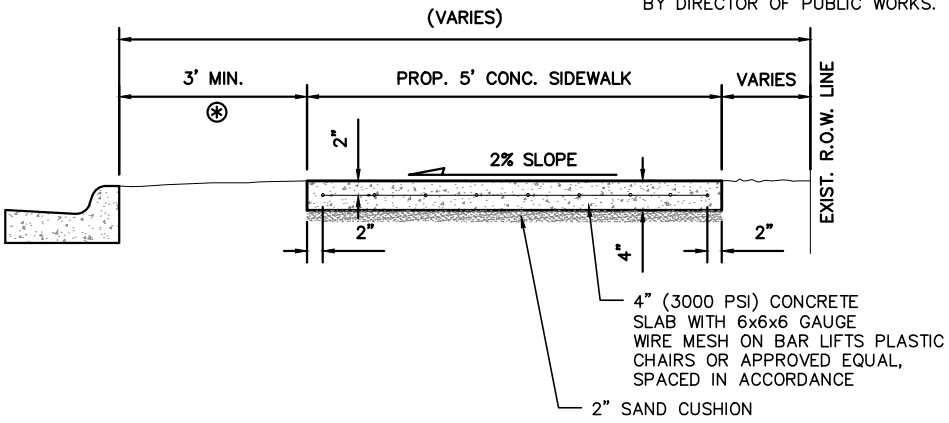

SECTION A–A

TYPICAL CONCRETE SIDEWALK DETAIL

P-10	CONCRETE SIDEWALK DETAILS		THE CITY OF EDINBURG PUBLIC WORKS DEPARTMENT
	SCALE: N.T.S.	REVISED: IP/PNL	
	DATE: APRIL, 2014	DRAWN BY: RMM	

Apr 03, 2014 – 4:29PM

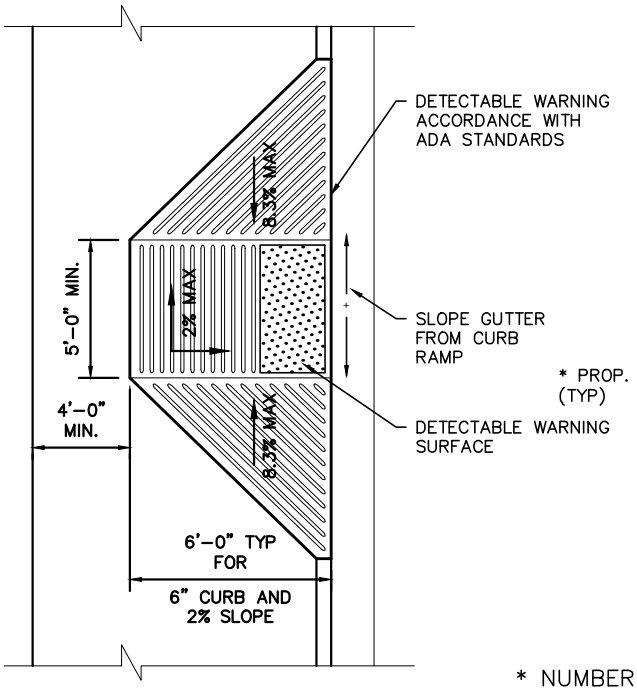

PLAN VIEW

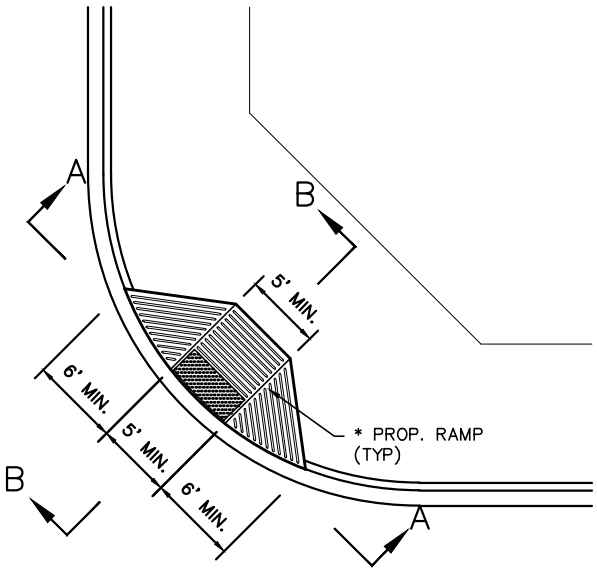

PLAN VIEW

* NUMBER RAMPS AND RAMP TYPES MAY VARY WHERE PROPOSED.

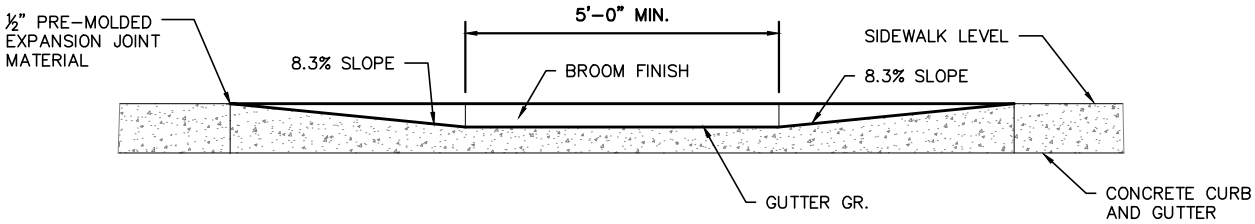

SECTION A-A

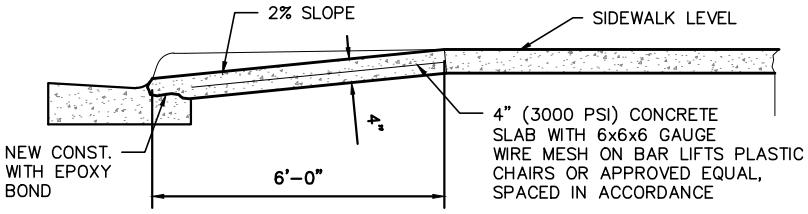

SECTION B-B

P-11	HANDICAP RAMP DETAILS		THE CITY OF EDINBURG PUBLIC WORKS DEPARTMENT
	SCALE: N.T.S.	REVISED: IP/PNL	
	DATE: APRIL, 2014	DRAWN BY: RMM	

Apr 03, 2014 – 4:30PM

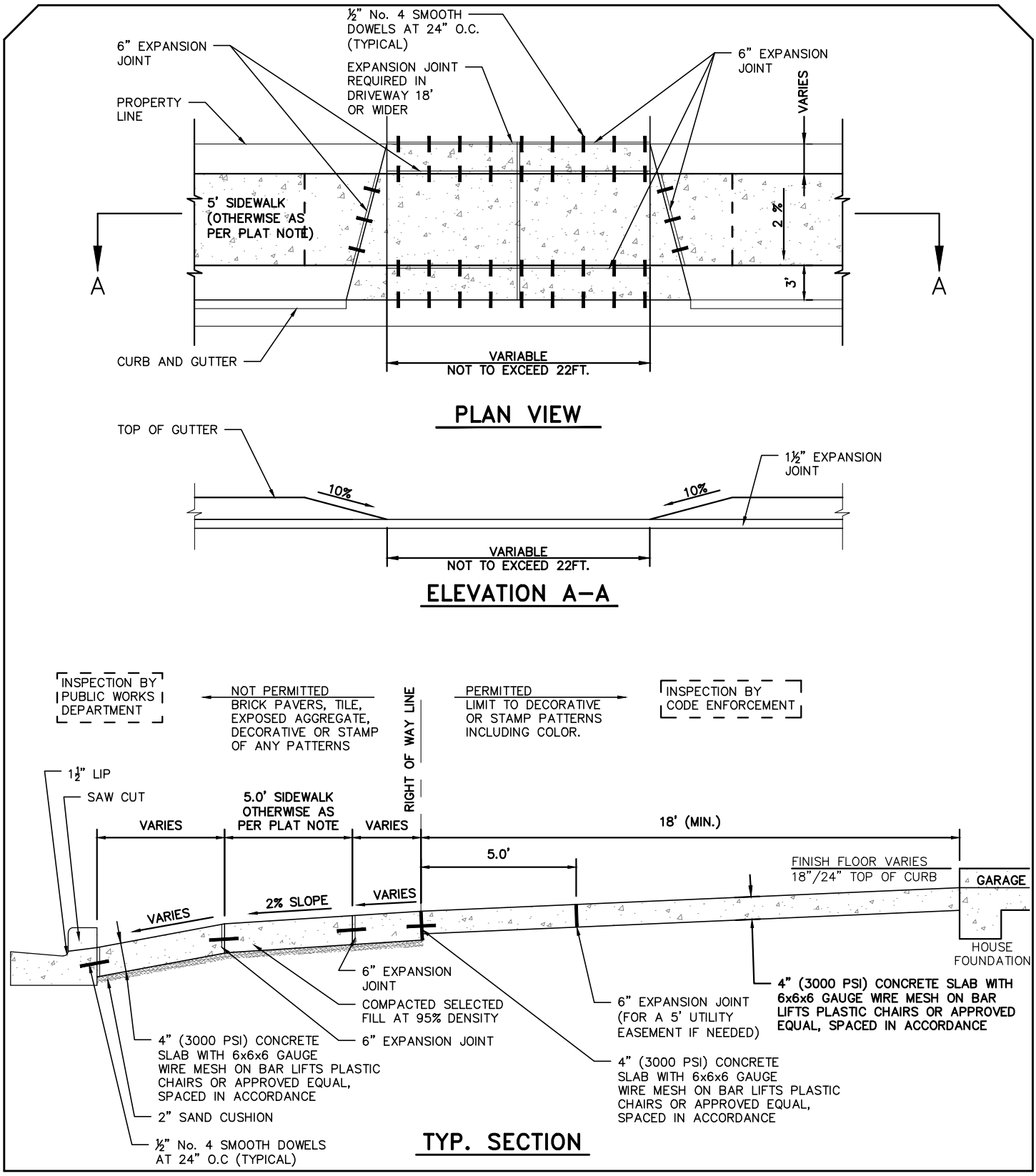

P-12	PAVING DRIVEPAD DETAILS	THE CITY OF EDINBURG PUBLIC WORKS DEPARTMENT
	SCALE: N.T.S. / REVISED: AB/PNL	
	DATE: MARCH, 2013 / DRAWN BY: RMM	

Mar 12, 2014 – 10:17AM

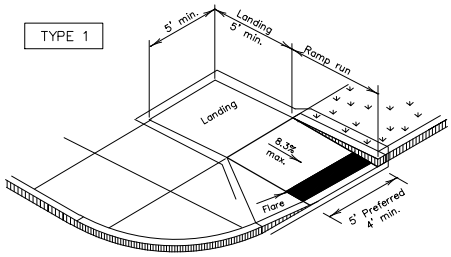

PERPENDICULAR CURB RAMP

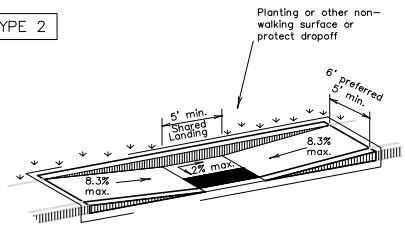

PARALLEL CURB RAMP
(Use only where water will not pond in the landing.)

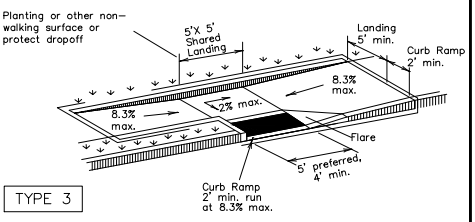

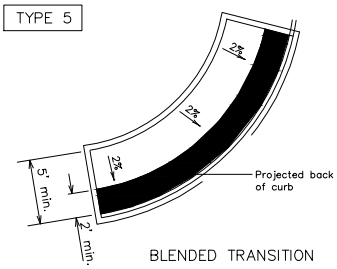

BLENDED TRANSITION

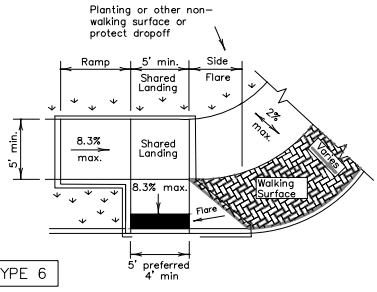

COMBINATION CURB RAMPS

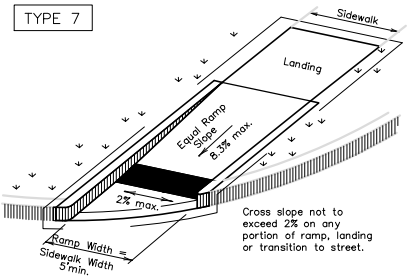

(Sidewalk set back from curb)

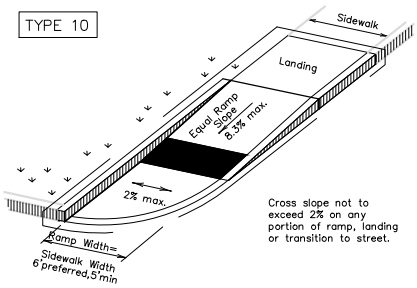

(Sidewalk adjacent to curb)

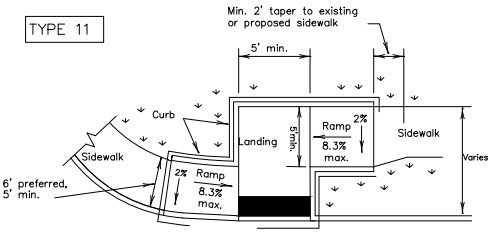

OFFSET PARALLEL CURB RAMP

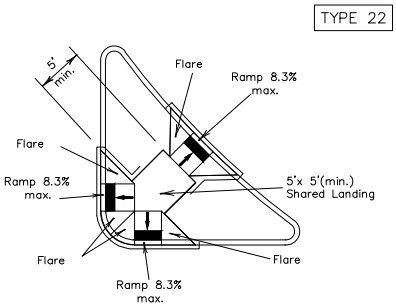

COMBINATION ISLAND RAMPS

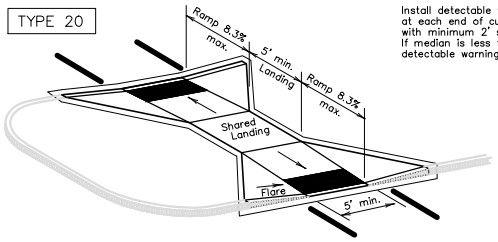

Install detectable warning surface at each end of cut-through ramp with minimum 2' smooth surface between. If median is less than 6' wide, eliminate detectable warning surfaces.

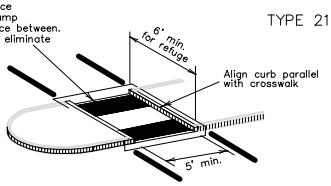

Curb details are shown elsewhere in the plans.

CURB RAMPS AT MEDIAN ISLANDS

NOTES / LEGEND:

See General Notes on sheet 2 of 4 for more information.

Denotes planting or non-walking surface not part of pedestrian circulation path.

Ramp Limits of Payment

Detectable Warning Surface

P-13

PEDESTRIAN FACILITIES RAMPS TYPES

SCALE: N.T.S.	REVISED: PNL
DATE: APRIL, 2014	DRAWN BY: RMM

THE CITY OF EDINBURG
PUBLIC WORKS DEPARTMENT

Apr 03, 2014 – 4:32PM

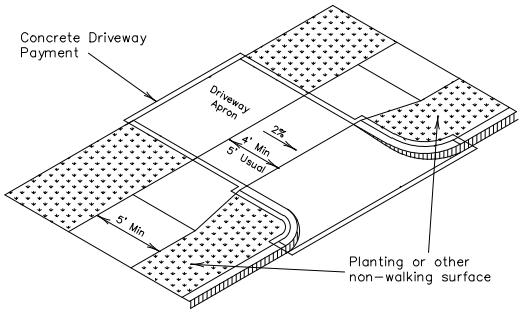

Setback sidewalk

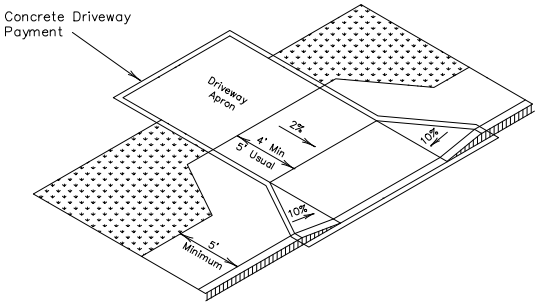

Apron offset sidewalk

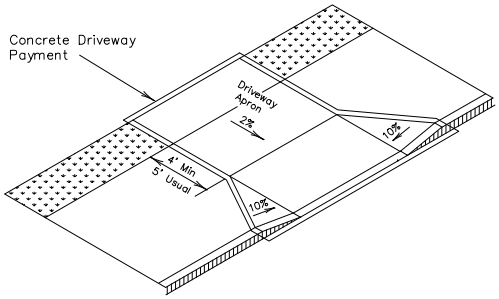

Wide sidewalk

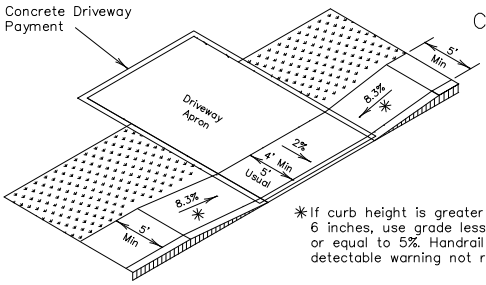

✳If curb height is greater than 6 inches, use grade less than or equal to 5%. Handrail and detectable warning not required.

Ramp sidewalk

SIDEWALK TREATMENT AT DRIVEWAYS

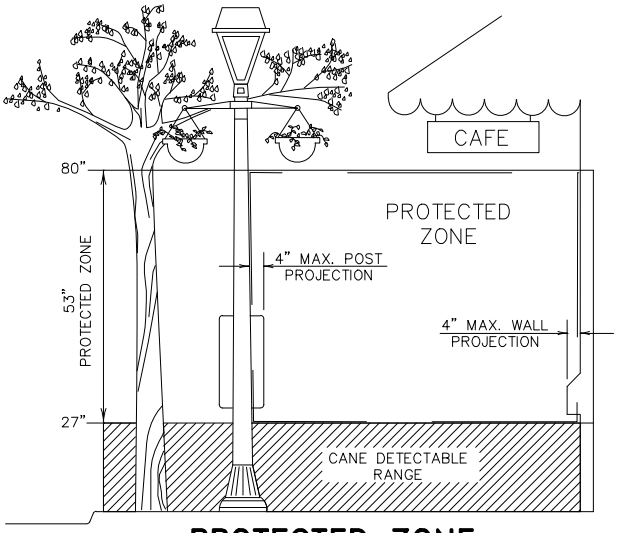

PROTECTED ZONE

In pedestrian circulation area, maximum 4" projection for post or wall mounted objects between 27"and 80" above the surface.

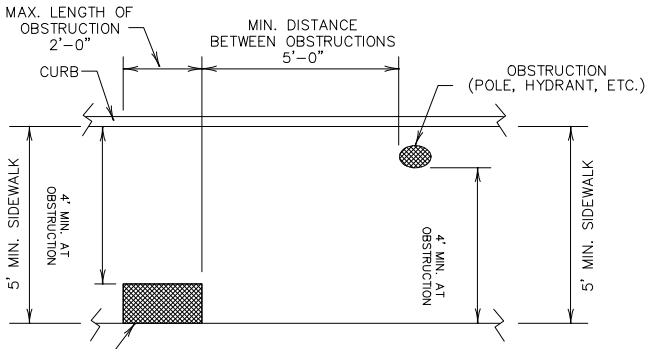

PLAN VIEW

PLACEMENT OF STREET FIXTURES

(ITEMS NOT INTENDED FOR PUBLIC USE. MINIMUM 4' x 4' CLEAR GROUND SPACEREQUIRED AT PUBLIC USE FIXTURES.)

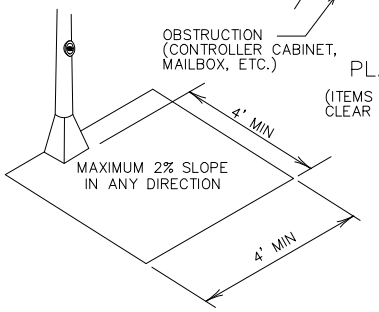

CLEAR GROUND SPACE ADJACENT TO PEDESTRIAN PUSH BUTTON

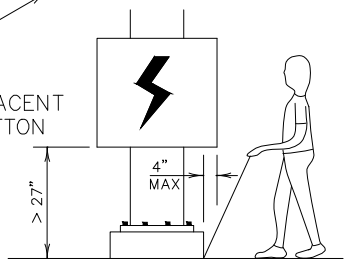

When an obstruction of a height greater than 27" from the surface would create a protrusion of more than 4" into the pedestrian circulation area, construct additional curb or foundation at the bottom to provide a maximum 4" overhang.

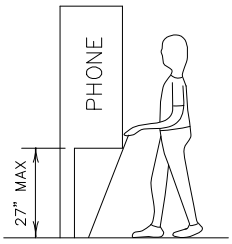

Protruding objects of a height ≤27" are detectable by cane and do not require additional treatment.

DETECTION BARRIER FOR VERTICAL CLEARANCE <80"

P-14

PEDESTRIAN FACILITIES

SIDEWALK AT DRIVEWAY

SCALE: N.T.S.	REVISED: PNL
DATE: APRIL, 2014	DRAWN BY: RMM

THE CITY OF EDINBURG

PUBLIC WORKS DEPARTMENT

Apr 03, 2014 – 4:32PM

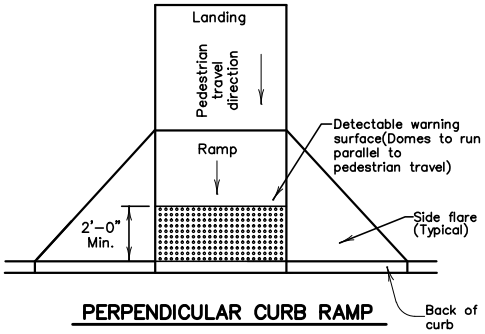

PERPENDICULAR CURB RAMP

Typical placement of detectable warning surface on sloping ramp run.

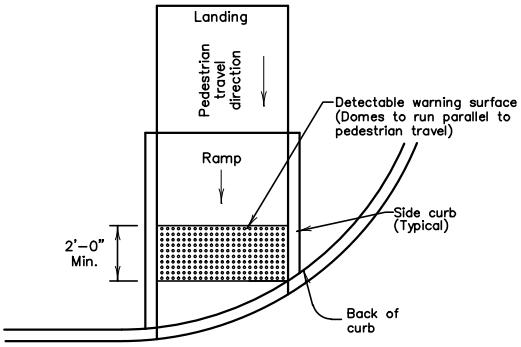

DIRECTIONAL CURB RAMP

Typical placement of detectable warning surface on sloping ramp run.

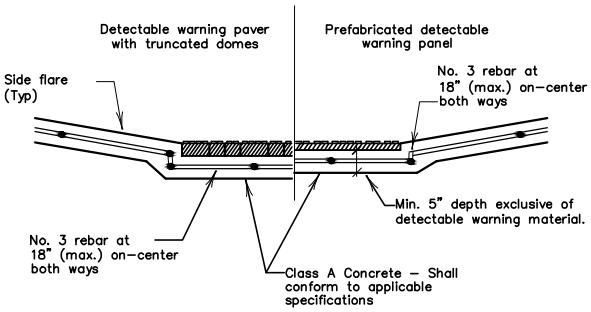

SECTION: CURB RAMP AT DETECTABLE WARNING

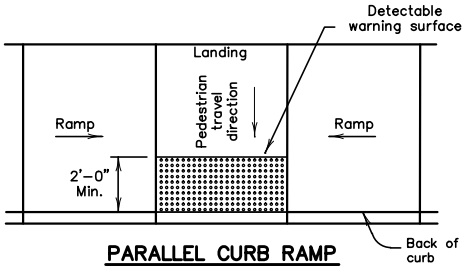

PARALLEL CURB RAMP

Typical placement of detectable warning surface on landing at street edge.

General Notes

Curb Ramps

1. Install a curb ramp or blended transition at each pedestrian street crossing.
2. All slopes shown are maximum allowable. Lesser slopes that will still drain properly should be used. Adjust curb ramp length or grade of approach sidewalks as directed.
3. The minimum sidewalk width is 5'. Where the sidewalk is adjacent to the back of curb, a 6' sidewalk width is desirable. Where a 5' sidewalk cannot be provided due to site constraints, sidewalk width may be reduced to 4' for short distances. 5'x 5' passing areas at intervals not to exceed 200' are required.
4. Landings shall be 5'x 5' minimum with a maximum 2% slope in any direction.
5. Maneuvering space at the bottom of curb ramps shall be a minimum of 4'x 4' wholly contained within the crosswalk and wholly outside the parallel vehicular travel path.
6. Maximum allowable cross slope on sidewalk and curb ramp surfaces is 2%.
7. Provide flared sides where the pedestrian circulation path crosses the curb ramp. Flared sides shall be sloped at 10% maximum, measured parallel to the curb. Returned curbs may be used only where pedestrians would not normally walk across the ramp, either because the adjacent surface is planted, substantially obstructed, or otherwise protected.
8. Additional information on curb ramp location, design, light reflective value and texture may be found in the current edition of the Texas Accessibility Standards (TAS) and 16 TAC 68.102.
9. To serve as a pedestrian refuge area, the median should be a minimum of 6' wide, measured from back of curbs. Medians should be designed to provide accessible passage over or through them.
10. Small channelization islands, which do not provide a minimum 5'x 5' landing at the top of curb ramps, shall be cut through level with the surface of the street.
11. Crosswalk dimensions, crosswalk markings and stop bar locations shall be as shown elsewhere in the plans. At intersections where crosswalk markings are not required, curb ramps shall align with theoretical crosswalks unless otherwise directed.
12. Handrails are not required on curb ramps. Provide curb ramps wherever on accessible route crosses (penetrates) a curb.
13. Curb ramps and landings shall be constructed and paid for in accordance with Item 531 "Sidewalks".
14. Place concrete at a minimum depth of 5" for ramps, flares and landings, unless otherwise directed.
15. Provide a smooth transition where the curb ramps connect to the street.
16. Curbs shown on sheet 1 within the limits of payment are considered part of the curb ramp for payment, whether it is concrete curb, gutter, or combined curb and gutter.
17. Existing features that comply with TAS may remain in place unless otherwise shown on the plans.

Detectable Warning Material

18. Curb ramps must contain a detectable warning surface that consists of raised truncated domes complying with Section 705 of the TAS. The surface must contrast visually with adjoining surfaces, including side flares. Furnish and install an approved cast–in–place dark brown or dark red detectable warning surface material adjacent to uncolored concrete, unless specified elsewhere in the plans.
19. Detectable Warning Materials must meet TxDOT Departmental Materials Specification DMS 4350 and be listed on the Material Producer List. Install products in accordance with manufacturer's specifications.
20. Detectable warning surfaces must be slip resistant and not allow water to accumulate.
21. Detectable warning surfaces shall be a minimum of 24" in depth in the direction of pedestrian travel, and extend the full width of the curb ramp or landing where the pedestrian access route enters the street.
22. Detectable warning surfaces shall be located so that the edge nearest the curb line is at the back of curb. Align the rows of domes to be perpendicular to the grade break between the ramp run and the street. Detectable warning surfaces may be curved along the corner radius.
23. Shaded areas on Sheet 1 of 4 indicate the approximate location for the detectable warning surface for each curb ramp type.

Detectable Warning Pavers

24. Furnish detectable warning paver units meeting all requirements of ASTM C–936, C–33. Lay in a two by two unit basket weave pattern or as directed.
25. Lay full–size units first followed by closure units consisting of at least 25 percent of a full unit. Cut detectable warning paver units using a power saw.

Sidewalks

26. Provide clear ground space at operable parts, including pedestrian push buttons. Operable parts shall be placed within one or more reach ranges specified in TAS 308.
27. Place traffic signal or illumination poles, ground boxes, controller boxes, signs, drainage facilities and other items so as not to obstruct the pedestrian access route or clear ground space.
28. Street grades and cross slopes shall be as shown elsewhere in the plans.
29. Changes in level greater than 1/4 inch are not permitted.
30. The least possible grade should be used to maximize accessibility. The running slope of sidewalks and crosswalks within the public right of way may follow the grade of the parallel roadway. Where a continuous grade greater than 5% must be provided, handrails may be desirable to improve accessibility. Handrails may also be needed to protect pedestrians from potentially hazardous conditions. If provided, handrails shall comply with TAS 505.
31. Handrail extensions shall not protrude into the usable landing area or into intersecting pedestrian routes.
32. Driveways and turnouts shall be constructed and paid for in accordance with Item "Intersections, Driveways and Turnouts". Sidewalks shall be constructed and paid for in accordance with Item, "Sidewalks".
33. Sidewalk details are shown elsewhere in the plans.

Apr 04, 2014 – 10:34AM

P-15

PEDESTRIAN FACILITIES
DETECTABLE WARNINGS

SCALE: N.T.S.	REVISED: PNL
DATE: APRIL, 2014	DRAWN BY: RMM

THE CITY OF EDINBURG
PUBLIC WORKS DEPARTMENT

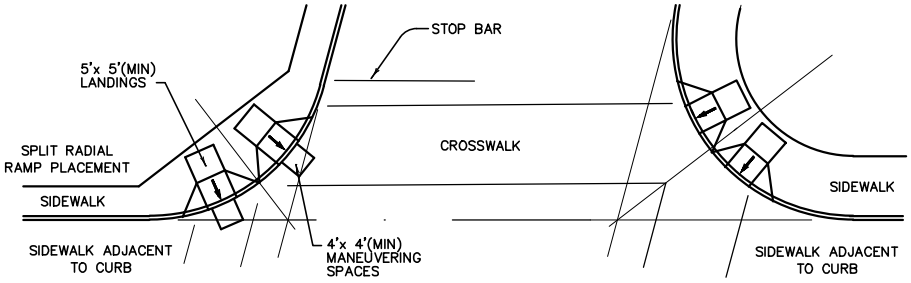

SKEWED INTERSECTION WITH "LARGE" RADIUS

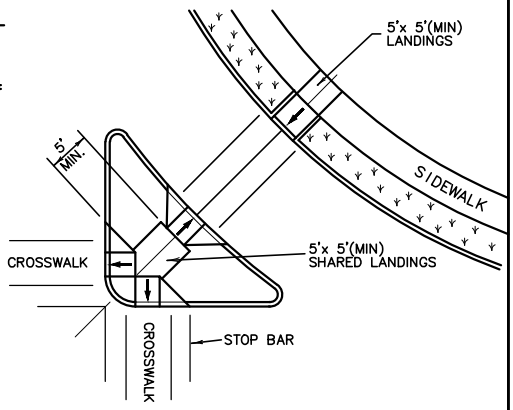

AT INTERSECTION
W/FREE RIGHT TURN & ISLAND

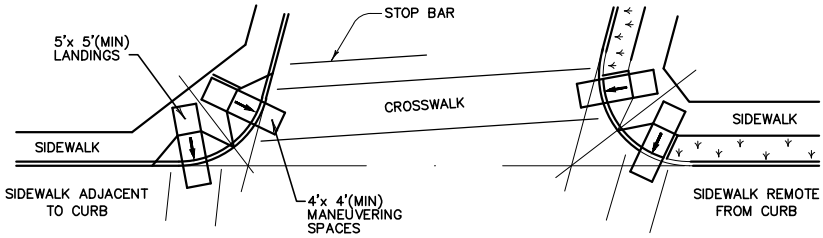

SKEWED INTERSECTION WITH "SMALL" RADIUS

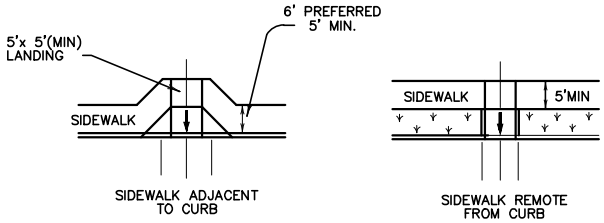

MID-BLOCK PLACEMENT
PERPENDICULAR RAMPS

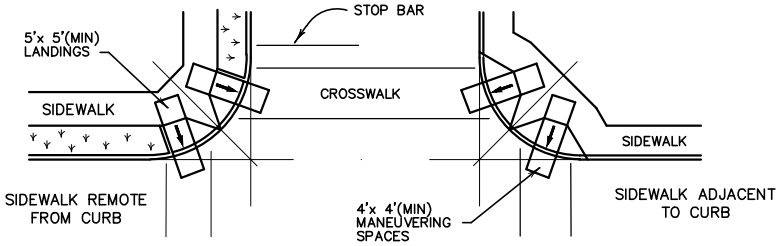

NORMAL INTERSECTION WITH "SMALL" RADIUS

TYPICAL CROSSING LAYOUTS

P-16	PEDESTRIAN FACILITIES CROSSING LAYOUT		THE CITY OF EDINBURG PUBLIC WORKS DEPARTMENT
	SCALE: N.T.S.	REVISED: PNL	
	DATE: APRIL, 2014	DRAWN BY: RMM	

Apr 04, 2014 – 10:35AM

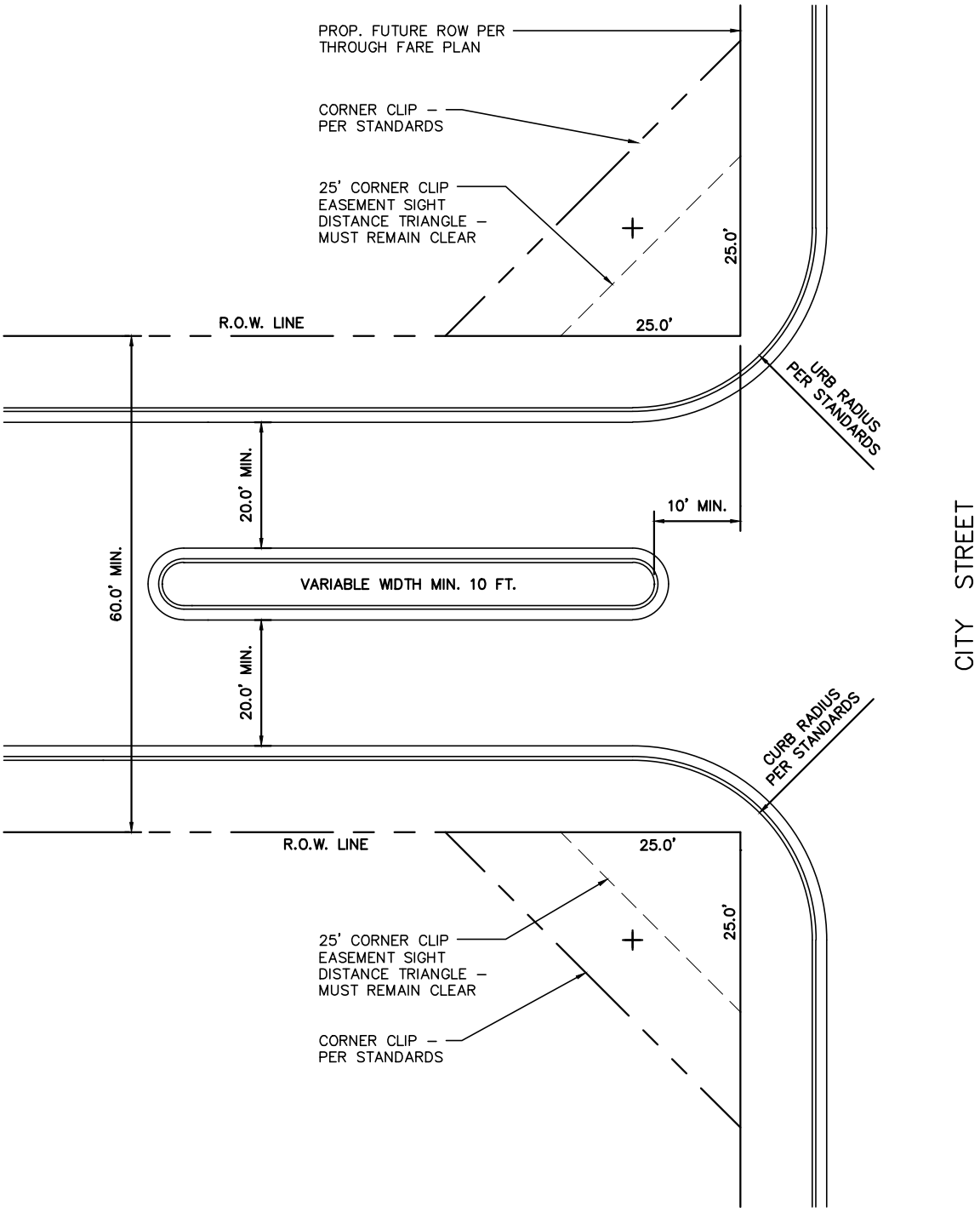

P-17

MEDIAN DETAIL

SCALE: N.T.S.	REVISED: AB
DATE: APRIL, 2014	DRAWN BY: RMM

THE CITY OF EDINBURG
PUBLIC WORKS DEPARTMENT

Apr 03, 2014 – 4:34PM

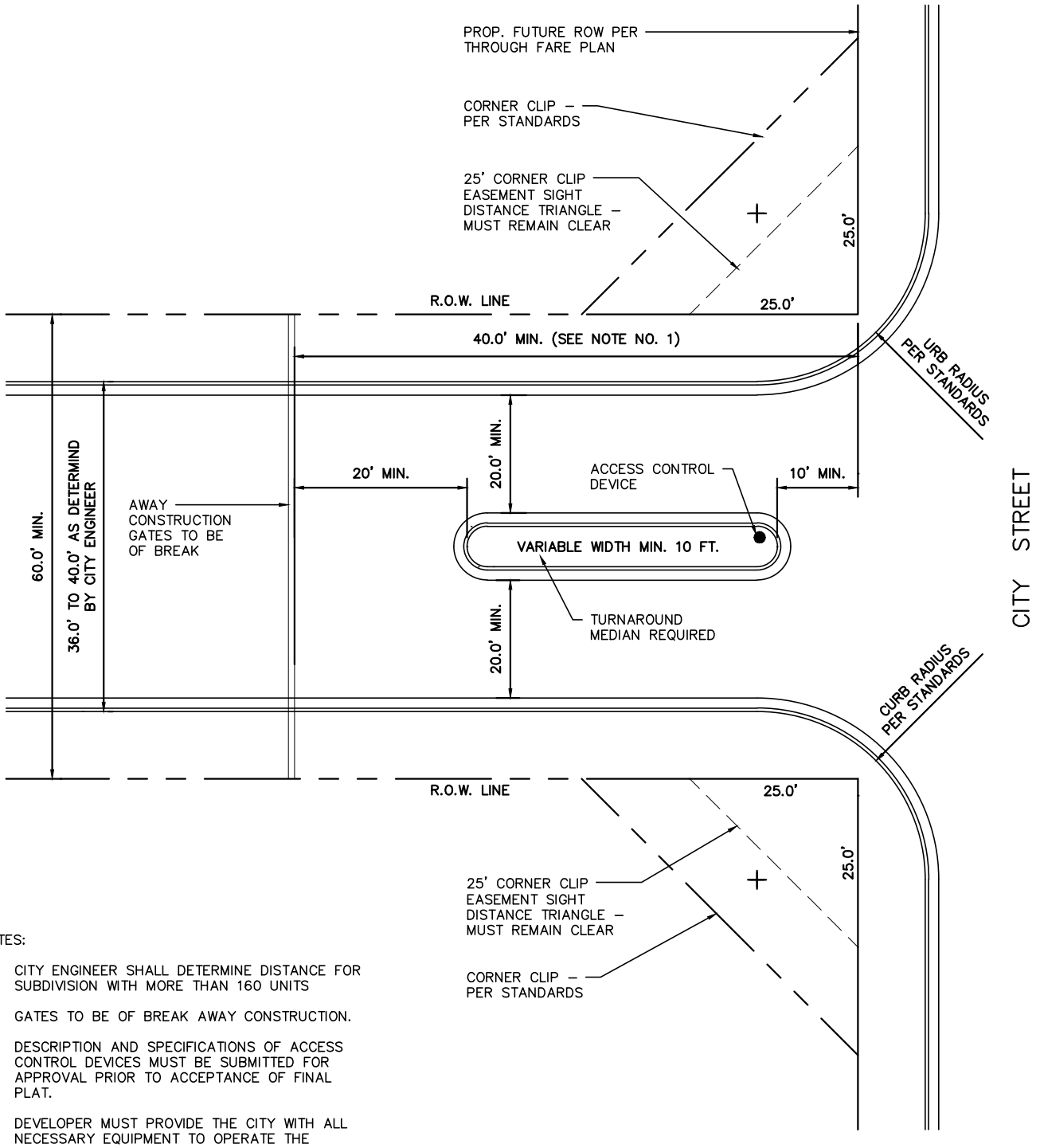

NOTES:

1. CITY ENGINEER SHALL DETERMINE DISTANCE FOR SUBDIVISION WITH MORE THAN 160 UNITS
2. GATES TO BE OF BREAK AWAY CONSTRUCTION.
3. DESCRIPTION AND SPECIFICATIONS OF ACCESS CONTROL DEVICES MUST BE SUBMITTED FOR APPROVAL PRIOR TO ACCEPTANCE OF FINAL PLAT.
4. DEVELOPER MUST PROVIDE THE CITY WITH ALL NECESSARY EQUIPMENT TO OPERATE THE ACCESS CONTROL DEVICES

Apr 03, 2014 – 4:35PM

P-18

GATED ENTRANCE DETAIL

SCALE: N.T.S.	REVISED: IP/AB
DATE: APRIL, 2014	DRAWN BY: RMM

THE CITY OF EDINBURG
PUBLIC WORKS DEPARTMENT

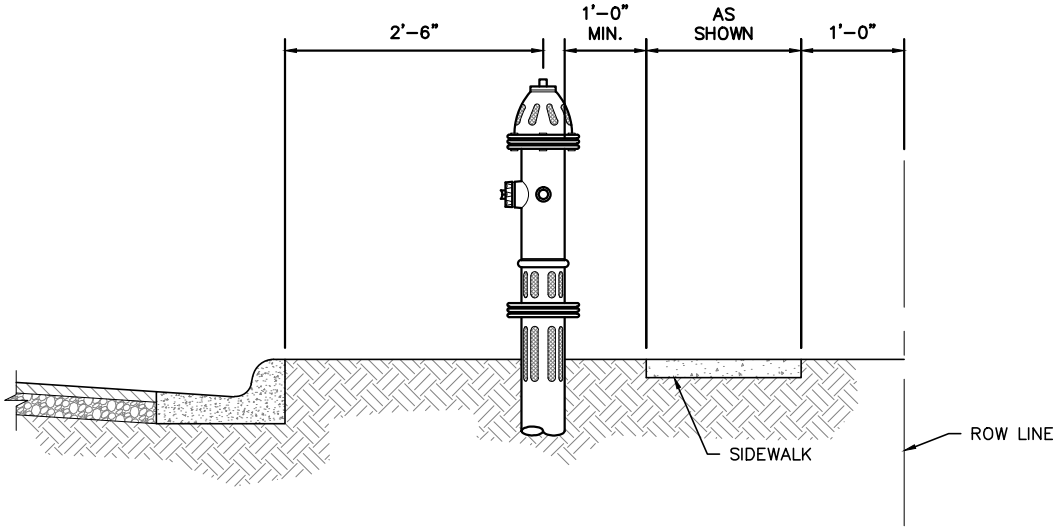

FIRE HYDRANT LOCATION – PROFILE

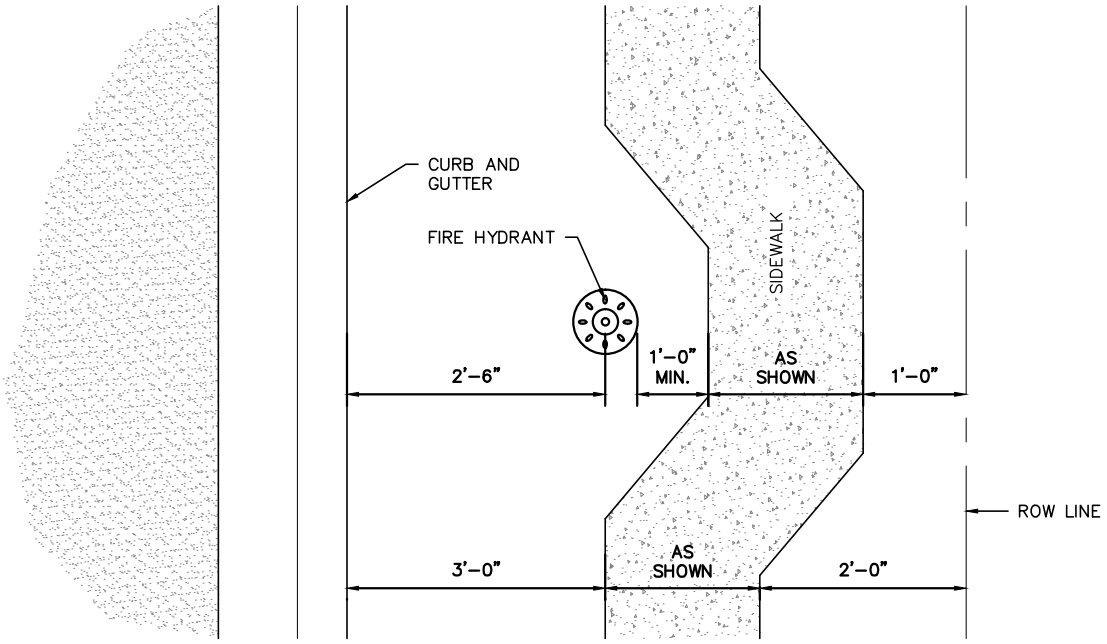

FIRE HYDRANT LOCATION – PLAN

P-19	SIDEWALK DEVIATION AT FIRE HYDRANT	THE CITY OF EDINBURG PUBLIC WORKS DEPARTMENT
	SCALE: N.T.S.	REVISED: IP/AB
	DATE: APRIL, 2014	DRAWN BY: RMM

Apr 03, 2014 – 4:35PM

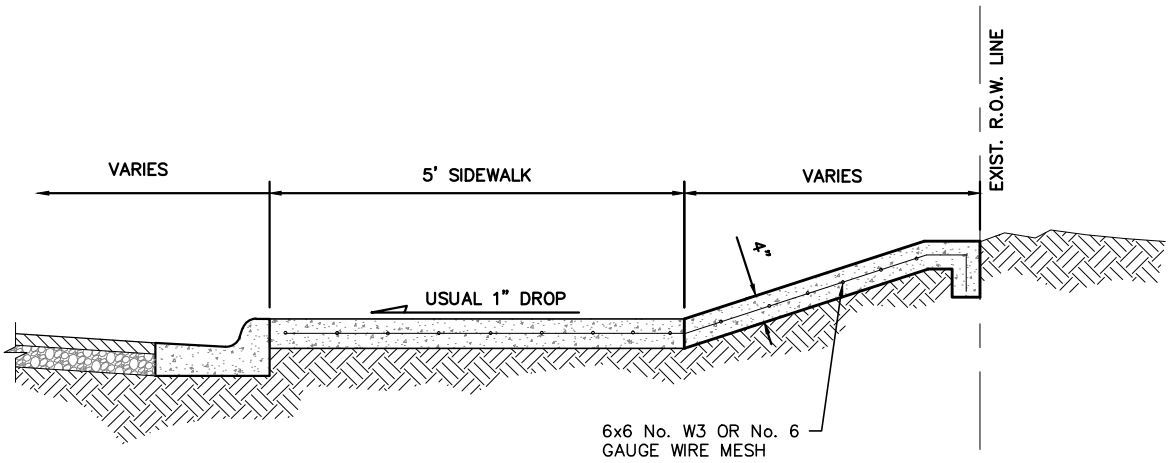

SIDEWALK RIP-RAP

P-20	SIDEWALK RIP-RAP		THE CITY OF EDINBURG PUBLIC WORKS DEPARTMENT
	SCALE: N.T.S.	REVISED: JAG/AB	
	DATE: APRIL, 2014	DRAWN BY: RMM/JAS	

Apr 03, 2014 – 4:36PM

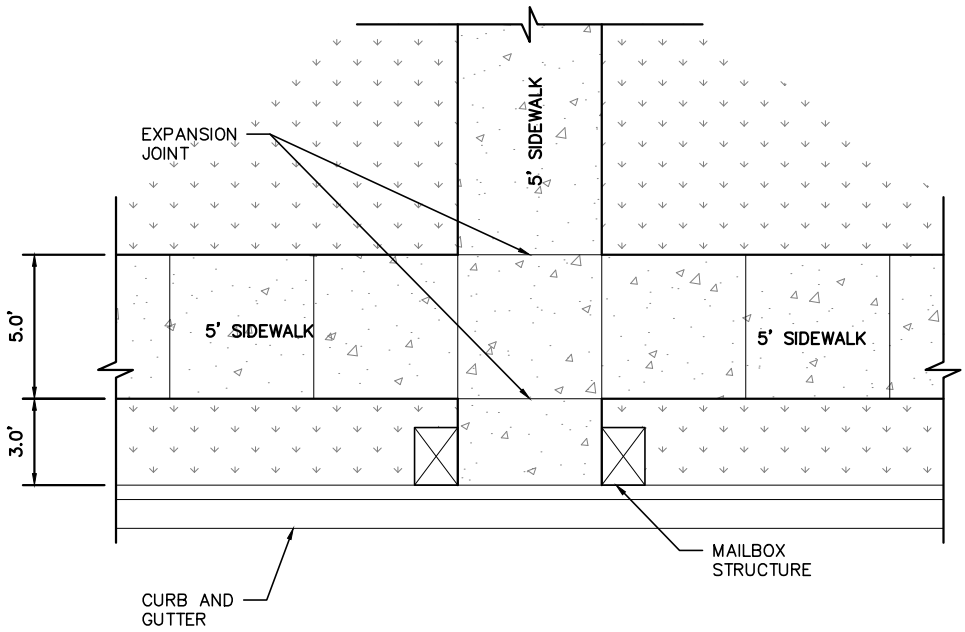

SIDEWALK PLAN

NOTE:

1. ANY CHANGE TO SIDEWALK PLAN SHOULD BE APPROVED BY THE DIRECTOR OF PUBLIC WORKS.

P-21	ADA SIDEWALK AT MAILBOX DETAILS	THE CITY OF EDINBURG PUBLIC WORKS DEPARTMENT
	SCALE: N.T.S.	REVISED: AB
	DATE: APRIL, 2014	DRAWN BY: JAS

Apr 03, 2014 – 4:36PM

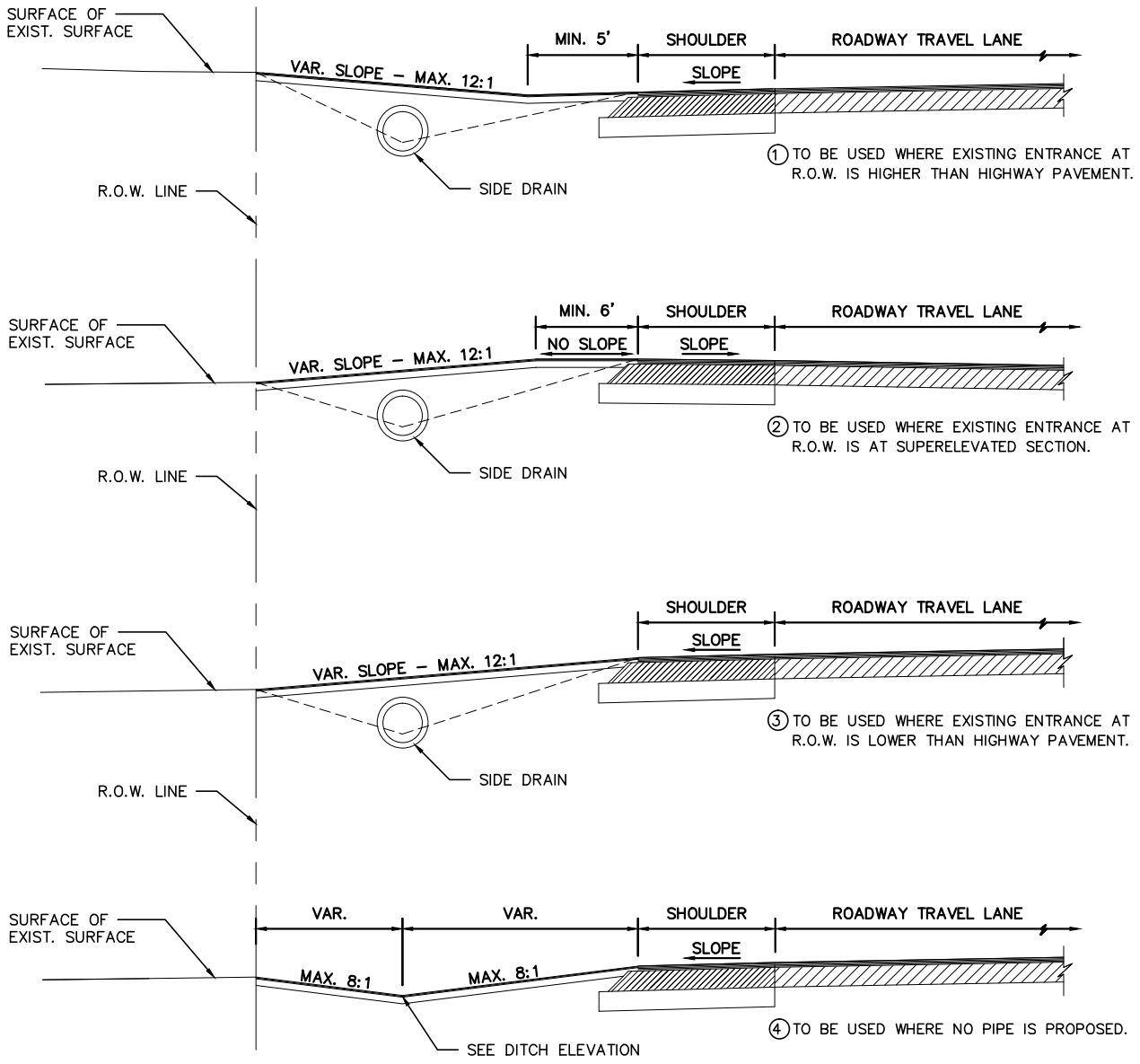

TYPICAL ENTRANCE PROFILE FOR DRIVEWAYS W/OUT C&G

P-22	ENTRANCE PROFILE FOR DRIVEWAYS W/OUT C&G	THE CITY OF EDINBURG PUBLIC WORKS DEPARTMENT
	SCALE: N.T.S. / REVISED: AB	
	DATE: APRIL, 2014 / DRAWN BY: RMM	

Apr 03, 2014 – 4:37PM

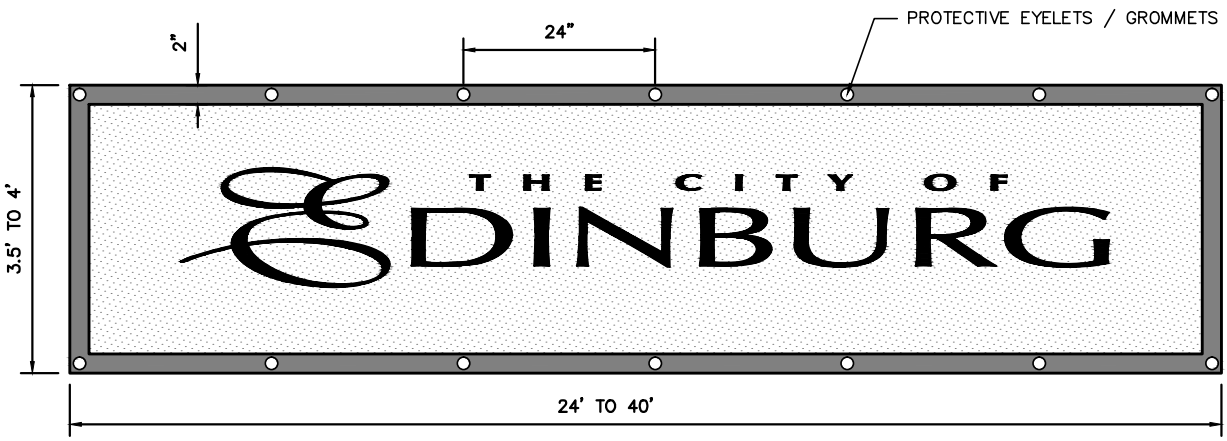

TYPICAL BANNER

NOTES:

1. MESH MATERIAL (MESH MATERIAL WILL GUARANTEE LONGER LIFE OF THE BANNER DUE TO LESS WIND RESISTANCE AND IS REQUIRED) IS TO BE OF A TYPE THAT WILL WITHSTAND NORMAL WEATHER (WIND AND RAIN) CONDITIONS (NO EXCEPTIONS).

2. BANNER (TOP, BOTTOM AND BOTH SIDES) IS TO HAVE A FINISHED HEM TO PREVENT WIND TEARS.

3. A HAMMED EDGE APPROXIMATELY TOW (2) INCHES WIDE IS REQUIRED AT THE TOP, BOTTOM, AND BOTH SIDES OF BANNER WITH METAL EYELETS INSTALLED ON DOUBLED MATERIAL FOR THE PURPOSE OF ATTACHING THE BANNER TO THE EXISTING GUIDE WIRES.

4. GROMMETS (PROTECTIVE EYELETS) MUST BE PLACED ALONG THE TOP EDGES OF THE BANNER AND ONE AT EACH BOTTOM END. GROMMETS LOCATED AT THE BOTTOM ENDS WILL HAVE HEAVIER REINFORCING OR OTHER PRE-APPROVED METHOD (I.E. D RINGS WITH REINFORCED NY7LON STRAPS). THE MINIMUM GROMMET SIZE SHALL BE 1/2-INCH (INSIDE MEASUREMENT), AND THE GROMMETS SHALL BE PLACED EVERY TWENTY FOUR (24) INCHES.

Apr 03, 2014 - 4:37PM

P-23

TYPICAL BANNER DETAIL

SCALE: N.T.S.	REVISED: TR
DATE: APRIL, 2014	DRAWN BY: RMM

THE CITY OF EDINBURG
PUBLIC WORKS DEPARTMENT

This Page Intentionally Left Blank

SECTION 3 - WATER AND SEWER POLICY

3.01 General
3.02 Master Plan
3.03 Water Improvements
- A. General Policies
- B. Design Standards
- C. Materials
- D. Water Line Crossing within the City and ETJ
- E. Road Crossings
- F. Railroad Crossings
- G. Protection Requirements at Waterline–Sanitary Sewer Crossings (Non-Pressure Rated)
- H. Protection Requirements at Waterline–Sanitary Sewer Crossings (Pressure Rated)
- I. Additional Requirements
- J. Oil and Gas Pipeline Crossings
- K. Directional Bore Construction
- L. Circulation and Flushing for Water Quality
- M. Interconnections
- N. New Water Lines Constructed near Sanitary Sewers and Force Mains
- O. Required Submittals
- P. Water Meters

3.04 Sanitary Sewer Improvements
- A. General Policies
- B. Design Standards
- C. Materials
- D. Required Submittals

3.05 Connection to Wastewater Collection and Treatment Systems
- A. Connection Required
- B. On-Site Sewage Facilities
- C. Organized Sewage Facilities

3.06 Approved Materials Listing
See Exhibit “A”
3.07 Sample Reimbursement Contract
See Exhibit “B”
3.08 Table of Details

Water Distribution System:

W-1 Single Water Service Connection Details
W-2 Double Water Service Connection Details
W-3 Meter Service Detail
W-4 Water Standard Pipe Bedding Details
W-5 Thrust Blocks Details
W-6 Water & Sanitary Sewer Crossing Detail
W-7 Fire Hydrant Installation Detail
W-8 Valve and Valve Box Detail
W-9 Typical Air Release Valve Installation Details
W-10 Flush Valve Detail
W-11 Cast Iron Meter Cover Commercial Detail
W-12 Residential Oval Plastic Meter Cover Detail
W-13 Water Tapping Sleeve and Valve Installation on Larger Pipe
W-14 Same Size Water Tapping Sleeve and Valve Installation
W-15 Method for filling New Water Line Prior to Chlorination and Testing
W-16 Meter Vault Detail

Sanitary Sewer Collection System:

S-1 Residential Sanitary Sewer Service Details
S-2 Multifamily and Commercial Sanitary Sewer Service Details

S-3 Fiberglass Manhole Details
S-4 Shallow Service Connection Detail
S-5 Deep Service Connection Detail
S-6 Double Deep Service Connection Detail
S-7 Sewer Standard Pipe Bedding Details
S-8 Utility Crossing at Existing Street Detail
S-9 Utility Line Bore Detail
S-10 Drain Ditch Crossing Section
S-11 Sewage Air Release Valve Detail
S-12 Manhole Ring and Cover Details

SECTION 3
WATER AND SEWER POLICY

3.01 General

The purpose of this section is to define the general requirements for the design of water and sanitary sewer improvements and to provide typical details of these improvements. The Director of Public Works and the Director of Utilities Department / System Division should be consulted if variations from these standards are anticipated. In general these sections are conditions on utility requirements adopted by the Code of Ordinances of the City of Edinburg specified in the **Unified Development Code**. In cases where limitations or physical barriers restrict compliance with the provisions of this section shall adequate alternatives be considered by the Director of Public Works or the Director of Utilities.

3.02 Master Plan

All water and sewer designs must be sized and located according to the City's adopted Water and Wastewater Master Plan. The City of Edinburg will periodically amend its Water and Wastewater Master Plan and it is the **responsibility of the Project Engineer to be familiar with the most current adopted plan. In all cases, the designs must meet or exceed Texas Commission on Environmental Quality (TCEQ) Standards.**

3.03 Water Improvements

All water mains that are made a part of or extended from the distribution system of the City of Edinburg shall be in conformance to these requirements.

A. General Policies:

1. All developments within the City and its 3½ -mile Extraterritorial Jurisdiction (ETJ) shall be properly connected to the approved water distribution system.

2. The water distribution system shall be designed by a Professional Engineer licensed to practice in the State of Texas.

3. All water distribution systems shall be designed to provide service to and through subject property and maximize coverage to the City-approved service area.

4. Pipe sizes shall be required to serve the anticipated development but not less than:

   a. Single Family Residential
      i. Distribution and/or future extension – 8-inch
      ii. Internal Service – 8-inch
   b. Commercial, Retail, Multi-family – 8-inch
   c. Industrial – 8-inch
   d. Pipe sizes shall be measured in inches and even numbered only (excluding 10-inch size), odd numbered sizes shall not be allowed.

Developments bordering planned extensions of major transmission lines shown on the Water Master Plan shall install the shown pipe size at the cost of the development subject to the City's standard reimbursement policy specified in the Unified Development Code, Article 7 – Section 7.506 – *Responsibility for Payment of On-Site and Off-Site Installation Costs*. The developer is responsible up to and including pipe sizes of 12-inches. For larger pipe sizes, the City shall participate based on the availability of funds for the difference in cost of material only, subject to approval by the Director of Public Works and City Council.

5. The City may require a larger diameter pipe based on various factors including service area, demand, fire flow requirements and historical data.

6. Reimbursement for over-sizing shall not apply if such over-sizing was necessary to meet minimum fire-flow requirements.

7. All potable waterlines and lines with fire hydrants shall require a two source connection (looped system).

8. There shall be no connection made to any water main owned by or under the control of the City of Edinburg or any water main attached to the Edinburg distribution system by any person or persons, except authorized agents of the City of Edinburg. Authorized agents shall be limited to Contractors under contract by the City of Edinburg or private Developer Contractor authorized in writing by the City to perform work.

9. Fire Hydrant spacing shall be every 300 feet in commercial, industrial and multi-family areas, every 600 feet in residential areas, and so that every building in the City Limits (and ETJ developments) will be within 300 feet of a standard City fire hydrant. All distances will be measured along Public R.O.W. or emergency access ways. As it relates to public safety and the continual unobstructed flow of traffic, fire hydrants shall be located on both sides of all principle arterials or greater.

10. Blue Reflective Markers shall be affixed on the centerline pavement to indicate the location of a fire hydrant.

11. On cul-de-sac streets less than 400 feet in depth, the hydrant should be located at the entrance of the cul-de-sac. Hydrants shall be installed as specified in the Standard Details of this section. **Fire Marshal has authority on minimum quantity of hydrants and hydrant locations. Additional installations may be required at the discretion of the Director of Public Works.**

12. Flush valves shall be required in accordance with the Standard Details on dead-end mains at locations where a fire hydrant is not installed.

13. Valves shall be spaced at approximately a 600 foot grid or as directed by the Director of Public Works to minimize water outage during maintenance or emergency repairs. Valves shall also be located on any stub-outs for future main extension.

14. All lots must be serviced with dual water service stub-outs and located at lot lines. These service locations shall be marked on the curb and gutter with a “W” mark not less than 4-inches in size or in manner approved by the City. Water service shall be opposite of sewer service locations.

15. Upon termination of a one-year warranty period, maintenance of all water mains and water services up to and including the water meter device *(Code of Ordinances, Chapter 50)* located within City right-of-way or public easements shall become the property of the City of Edinburg.

16. All water services, beyond the water meter, shall be private and must be maintained by properties being serviced.

17. Waterline Testing - Prior to acceptance or connection to City distribution system, all testing must be successfully completed. The Engineering Field Inspector must observe all testing including setup, operation, and field results. The Contractor is responsible for all materials, equipment and labor to perform the following:

    a. Water mains and appurtenances shall be tested for leakage in accordance with AWWA Standard C-900 (150 p.s.i. for two hours). All air shall be removed from the water main before the start of the test.

       Leakage is defined as the quantity of water that must be supplied to the water main in maintaining the specified leakage test pressure. This quantity of water must be pumped with a pump of adequate head and capacity from a storage tank of such configuration that quantities of water pumped from the storage tank can be accurately calculated.

       The entire length of pipe line shall be tested as one length unless otherwise specified by the City.

    b. Before being placed in service, the entire line, including service connections, shall be chlorinated. Chlorine may be applied by hypochlorite and water mixture only. The chlorinating agent shall be applied at the beginning of each pipe section.

       Water shall be fed slowly into a new line to produce a dosage as indicated:

Dosage:		**Residence Time for Sterilization**	
50	ppm	24	Hrs.
200	ppm	8	Hrs.
500	ppm	30	Minutes

       After dosage has been tested by color indicator or photo cell and residence time is complete the line must be flushed before testing for bacteria by the City. Water for testing, flushing, etc., will be at the Contractor's expense and arrangements must be made with the City for the purchase of water. All water for testing flushing, etc. must be metered. The City will sample and perform the bacteriological tests and associated costs to be paid by the Contractor per sample including all retests required by the City.

B. Design Standards:

All water mains must be designed in accordance with Subchapter D: Rules and Regulations for Public Water Systems by the Texas Commission on Environmental Quality (TCEQ), current edition.

C. Materials:

Approved material listing is provided on Exhibit "A". All deviations must be approved in writing by the Director of Public Works and upon approval by the City's Technical Specification Review Committee. All pipe, fittings, and materials shall be new and in accordance with Standard Specifications.

1. P.V.C. or Polyvinyl Chloride pipe larger than 2-inches shall meet the requirements of AWWA C900, C905 PVC Pressure Pipe,
   a. Class 100 DR 25: Internal to subdivision,
   b. Class 150 DR 18: Offsite and along subdivision perimeter.

2. Copper tubing for cold water services shall meet or exceed any and all AWWA & ASTM Standards for HDPE Pipe to include ASTM D2737, ASTM D2239, C901, C906, and NSF standard 61 and 14 on sizes SIDR-9, SIDR-7, & SIDR 11.5 IPS.

3. Tapping sleeve and valve:

   a. Tapping sleeve to meet AWWA specifications with a minimum working pressure of 150 P.S.I.
   b. Tapping valve shall meet AWWA specifications with a minimum working pressure of 150 P.S.I.

4. All fittings shall be Ductile Iron meeting specifications of A.N.S.I./AWWA C110.

5. All bends / deflections shall utilize the Mega-lug, Mega-flange, joint restraint fittings.

6. All water services from water main to angle stop(s) shall be one continuous length of copper tubing with no splices.

7. No galvanized pipe or fitting will be allowed with the exception of 2-inch riser on blow-offs.

8. All valves will be fitted with a fully adjustable valve box and extension stern that is adjustable (trench adaptor) in trench depth from 3-feet to 13-feet depth.

D. Water Line Crossing within the City and ETJ:

1. Public and private utility crossings other than sanitary sewer: Where a water line crosses another utility (phone, cable, low pressure gas, etc.), a minimum of 6-inches of clearance must be maintained between the outside wall of the water line and the outside wall of the utility.

2. Stream or ditch crossings.

   a. Elevated Crossings:

      i. Water lines shall be steel encased with thickness as shown in details and shall extend a minimum of 15-feet beyond the last bend or the right-of-way line, whichever is greater.

ii. Elevated crossings are preferred to underground crossing.

iii. Supporting water lines on existing or proposed bridges meeting the following criteria may be used, when approved in advance by the Director of Public Works:

1. Have adequate structural capacity.
2. Have sufficient clearance above bent cp elevated for installation under the bridge.
3. Design elevated crossing with the elevation of the bottom of the water line above the low chord of the nearest adjacent bridge or a minimum 1½-foot above the 100-Year Floodplain Elevation, whichever is greater.
4. Extend pipe from right-of-way to right-of-way crossings.
5. Provide air release valves at the highest point of the waterline.
6. Provide sufficient span length to accommodate the section of future widening of the stream or ditch, if available.
7. Support the line on columns spaced to accommodate structural capacity of the pipeline considering deflection and loading.
8. Base column support design on soil capacity, spacing, loading, and structural requirements.
9. Provide pedestrian pipe guards on elevated crossings, when applicable.

b. Underground Crossing:

i. Provide a minimum 5-foot clearance above top of pipe to the ultimate flow line of the ditch.

ii. Provide sufficient length to exceed the ultimate future development of the ditch.

iii. Water lines shall be steel or restrained joint pipe and shall extend a minimum of 15-feet beyond the last bend or to the right-of-way line, whichever is greater.

E. <u>Road Crossings:</u>

1. All roadway crossings shall be bored with steel casing (thickness as shown on details)

2. Extend carrier pipe from proposed or existing right-of-way to right-of-way, whichever is greater.

3. Use PVC (DR 18) pipe within steel casing under existing and future roadway from a point 5-feet outside of the service road or outside of pavement toward the right-of-way, to a similar point on the other side of the highway across the right-of-way. For highway or roadway crossings with open-ditch drainage sections, extend casing from right-of way to right-of-way.

4. Where additional right-of-way has been acquired for future widening, the casing shall extend to within 10-feet of the future right-of-way line.

5. Coordinate and obtain all necessary roadway crossing permits from appropriate entities.

6. PVC casing shall not be allowed.

F. <u>Railroad Crossings:</u>

1. For railroad crossings, the water line shall be PVC (DR-18) pipe within a steel casing which extends from right-of-way to right-of-way. Any deviation must be approved by the appropriate railroad company and The City of Edinburg.

2. Where there is a non-railroad right-of-way, extend casing a minimum of 15-feet from either side of the centerline of the Right of Way or as required by the appropriate entity.

3. Coordinate and obtain permit with appropriate entity.

G. Protection Requirements at Waterline – Sanitary Sewer Crossings ***(Non-Pressure Rated)***:

PRIMARY CONDITIONS	**PROPOSED WATER EXISTING SANITARY**				**PROPOSED WATER PROPOSED SANITARY OR EXISTING WATER PROPOSED SANITARY**			
SECONDARY CONDITIONS	WATER OVER SANITARY		WATER UNDER SANITARY		WATER OVER SANITARY		WATER UNDER SANITARY	
IF THE CLEARANCE IS	Less Than 2-feet	Minimum of 2-feet	Less Than 2-feet	Minimum of 2-feet	Less Than 2-feet	Minimum of 2-feet	Less Than 2-feet	Minimum of 2-feet
* Protection Requirement	2	1	2	3	4	5a	2	5

PROTECTION REQUIREMENTS FOR SANITARY SEWER CROSSING
(Unless Variance is Granted by the TCEQ)
(All clearances shall be measured from outside wall to outside wall)

1. If no evidence of sanitary sewer leakage, center one 20-ft. joint of water line over sanitary sewer; 24-inch absolute minimum clearance. If the sewer line is leaking, the sewer line shall be replaced with 150-psi pressure rated pipe, lined ductile iron or PVC, with appropriate adapters for at least nine feet in both directions (18-feet total).

2. Not allowed.

3. Auger 9-feet minimum each side of force main. Place one 20-foot joint of C-900 PVC/C, 150 psi, centered under force main. Fill bored hole with bentonile/clay mixture; 2-foot absolute minimum clearance or replace the existing sanitary sewer with 150-psi lined ductile iron or PVC pipe with appropriate adapters on all portions of the sanitary sewer within 9-feet of the water line.

4. Minimum 18-foot joint of sanitary sewer, 150-psi lined ductile iron or PVC pipe centered at water line, 6-inches absolute minimum clearance.

5. Center a minimum 18-foot joint of sanitary sewer, 150-psi lined ductile iron or PVC pipe centered at waterline.

   a. Use cement-stabilized sand backfill for all portions of the sewer within 9-feet of the waterline, as measured perpendicularly from any point on the water pipe to the wastewater pipe (minimum 2.5-sacks cement per cubic yard of sand). The cement-stabilized sand bedding shall start at a point 6-

inch below the bottom of the sanitary sewer to 6-inches above the top of sanitary sewer and one-quarter of the pipe diameter on the side of the sewer.

H. Protection Requirements at Waterline – Sanitary Sewer Crossings ***(Pressure Rated)***:

PRIMARY CONDITIONS	**PROPOSED WATER EXISTING SANITARY**				**PROPOSED WATER PROPOSED SANITARY OR EXISTING WATER PROPOSED SANITARY**			
SECONDARY CONDITIONS	WATER OVER SANITARY		WATER UNDER SANITARY		WATER OVER SANITARY		WATER UNDER SANITARY	
IF THE CLEARANCE IS	Less Than 2-foot	Greater Than 2-feet But less than	Less Than 2-foot	Greater Than 2-feet But less than	Less Than 2-foot	Greater Than 2-feet But less than	Less Than 2-foot	Greater Than 2-feet But less than
* Protection Requirement	1	2	3	4	5	6	3	3

PROTECTION REQUIREMENTS FOR SANITARY SEWER CROSSING
(Unless Variance is granted by the TCEQ)
(All clearances shall be measured from outside wall to outside wall)

1. Construct waterline 20-foot steel section with all related appurtenances above the force main; 6-inch absolute minimum clearance.

2. Construct waterline with one 20-foot joint of C-900, C-905 PVC centered above the force main.

3. Not allowed.

4. Auger 9-feet minimum each side of force main. Place one 20-foot joint of C-900 PVC/C, 150-psi, centered under force main. Fill bored hole with bentonite/clay mixture; 2-foot absolute minimum clearance or replace the existing sanitary sewer with 150-psi lined ductile iron or PVC pipe with appropriate adapters on all portions of the sanitary sewer within 9-feet of the water line.

5. Center a minimum 18-foot joint of force main, 150-psi lined ductile iron or PVC pipe centered at waterline, and use cement-stabilized sand backfill for all portions of the sewer within 9-feet of the waterline, as measured perpendicularly from any point on the water pipe (minimum 2.5-sacks cement per cubic yard of sand). The cement-stabilized sand bedding shall start at a point 6-inch below the bottom of the sanitary sewer to 6-inches above the top of sanitary sewer and one-quarter of the pipe diameter on the side of the sewer.

6. Minimum 18-foot joint of force main, 150-psi lined ductile iron or PVC pipe centered at water line, 6-inches absolute minimum clearance.

I. Additional Requirements:

1. Use electrically isolated flange joints for transitions between two dissimilar metallic pipes. Electrically isolate water lines from casing pipe and supports.

2. The carrier pipeline shall extend a minimum of 1 foot beyond the end of the casing to allow flanged joints to be constructed.

3. For welded steel bends, extend steel pipe a minimum of 5 feet beyond the bend.

J. Oil and Gas Pipeline Crossing

1. Coordinate with applicable agency.

K. Directional Bore Construction:

Use the following general criteria for establishing bore sections:

1. Improved streets – Use bore construction to cross a street regardless of surface. Bore length shall be computed as roadway width at proposed bore location plus 5 feet to either side of roadway.

2. Driveways – Use bore construction to cross active driveways. Compute bore length as driveways width plus 1 foot to either side. Where proposed lines are in close vicinity and parallel to culvert pipes along roadside ditch streets, the length of bore shall be the same as the length of existing culvert.

3. Trees – Use auger construction to cross within 4 feet of trees 6 inches and larger in diameter. Use a minimum of 8-foot auger length centered about the tree.

L. Circulation and Flushing for Water Quality:

The layout of the water distribution system shall provide maximum circulation of water to prevent future problems of odor, taste, or color due to stagnant water.

1. All designs must provide a source of fresh water at each end or at multiple points of a subdivision to create circulation. Valves and fire hydrants must be placed to allow flushing of lines.

2. Dead end mains must be avoided. When necessary, isolate dead end lines with an in-line valve, and equip with a blow-off, fire hydrant or flushing valve at the end.

3. Stubs must be provided for future extensions. Stubs shall include a valve with no service connections on stubs. A full pipe joint between the valve and plug shall be required.

M. Interconnections

1. For interconnections between utility districts outside the City, written approval must be given by the TCEQ.

2. For interconnections between the City and Utility District a written agreement between the districts must be approved by the City and recorded in the County records.

N. New Water Lines Constructed near Sanitary Sewers and Force Mains

1. New Water Lines Parallel to Sanitary Sewers and Force Mains: Locate water lines a minimum of 9 feet horizontally, outside wall to outside wall, when parallel to sanitary sewers or force mains. Use the following procedure when 9-foot separation cannot be achieved:

a. When a new water line is to parallel an existing sanitary sewer force main or gravity sanitary sewer and the 9-foot minimum separation distance cannot be maintained, the existing sanitary sewer shall be replaced with lined ductile iron pipe or PVC pipe meeting ASTM specifications, having a minimum working pressure rating of 150 psi or greater and equipped with pressure-type joints.

b. The water lines and sanitary sewer shall be separate by a minimum vertical distance of 2 feet, and a minimum horizontal distance of 4 feet, measured between the nearest outside walls of the pipes, and in all cases, the water line shall be located above the sewer.

2. New Water Lines Crossing Sanitary Sewers and Force Mains.

a. No protection is required if the sanitary sewer is 9 feet below the water line.

O. Required Submittals

See Section 4 of the Engineering Standards.

P. Water Meters

All meter seizes shall require prior approval by the City of Edinburg. Final meter size determination will be made by the City and shall be based on consumption standards.

Note: All 4" (inch) and above meters shall be placed in a concrete meter vault and be approved by the City. Meters accepted will be Badger, Hersey, or Sensus or an approved equal.

3.04 Sanitary Sewer Improvements:

All sanitary sewer mains that are made a part of or extended from the collection system of the City of Edinburg shall be in conformance to these requirements.

A. General Policies

1. All developments within the City and its 2-mile Extraterritorial Jurisdiction (ETJ) shall be properly connected to the approved sanitary sewer collection system.

2. The Sanitary Sewer Collection System shall be designed by a Professional Engineer licensed to practice in the State of Texas.

3. All sanitary sewer collection systems shall be designed to provide service to and through subject property and maximize coverage to the City approved service area.

4. Pipe sizes shall be required to serve the anticipated development but not less than:

a.	Single Family	- 8-inches
b.	Commercial, Retail, Multi-Family	- 8-inches
c.	Industrial	- 12-inches
d.	Educational Facility	- 12-inches

Developments bordering planned extensions of major collection lines shown on the Wastewater Master Plan shall install the shown pipe size at the cost of the development subject to the City's standard reimbursement policy specified in the Unified Development Code, Article 7- Section 7.506 – *Responsibility for payment of On-Site and Off-Site Installation Costs*. The Developer is responsible up to and including pipe sizes of 12-inches. For larger pipe sizes, the City may participate based on the availability of funds for the difference in cost of material only, subject to approval by the Director of Public Works and City Council.

5. The City may require a larger diameter pipe based on various factors including service area, demand, projected service and historical data.

6. There shall be no connection made to any sanitary sewer main owned by or under the control of the City of Edinburg, or any sanitary sewer main attached to the Edinburg collection system by any person or persons, except authorized agents of the City of Edinburg. Authorized agents shall be limited to Contractors under contract by the City of Edinburg or private Developer Contractor authorized in writing by the City to perform work.

7. All lots must be serviced with single service stub-outs, including a clean-out located within the property easement. These service locations shall be marked on the curb and the gutter with an "S" not less than 4-inches in size or in a manner approved by the City. Sewer services shall be opposite of water service locations. Also, a magnetic tape must be installed from the point of the stub out extending 12-inches above finished grade of the lot. The tape shall read "SEWER" at intervals on the entire length of the tape.

8. Upon termination of a one-year warranty period, maintenance of all sewer mains located within City right-of-way or public easements shall become the property of the City of Edinburg.

9. Wastewater Lateral Maintenance – The customer shall be responsible for keeping the lateral free of all obstruction from his/her premises to the main wastewater collection line within a public right-of-way or easement. The customer shall be responsible for removing any obstruction (stoppages) that occur within the wastewater lateral up to the property easement or property line. The City will be responsible for keeping all main wastewater collection lines within a public right-of-way or easement free of obstruction subject to other provisions within this Chapter.

10. Manhole spacing shall be in accordance with the Design Criteria for Sewage Systems by the Texas Commission on Environmental Quality (TCEQ) TAC 217 current edition. As allowed by this rule, the City of Edinburg Utilities, shall require **manholes spacing at a maximum of 400-feet.**

11. All sewer mains and appurtenances shall be tested for exfiltration/infiltration in accordance with Design Criteria for Sewage Systems by the Texas Commission on Environmental Quality (TCEQ) TAC 217, current edition.

12. Sanitary Sewer Testing – Prior to acceptance or connection to City collection system, all testing must be successfully completed. The Engineering Field Inspector must observe all testing including setup, operation, and field results. The Contractor is responsible for all materials, equipment and labor to perform the following:

a. Infiltration/Exfiltration Limitations: The total infiltration or exfiltration, as determined by test, shall not exceed 200 gallons per inch diameter per mile of pipe per 24 hours at a minimum test head of 2 feet. If the quantity of infiltration or exfiltration exceeds the maximum quantity specified, remedial action shall be undertaken in order to reduce the infiltration or exfiltration to an amount within limits as specified. Infiltration or exfiltration tests shall be performed on the total footage on the project. Copies of all test results shall be made available to the Engineering Department. The air test shall conform to the procedure described in ASTM C 828 or other appropriate procedures.

b. Deflection Test: Deflection tests shall be performed on all flexible and semi-rigid pipes. **The test shall be conducted after the final backfill has been in place at least 30 days.** No pipe shall exceed a deflection of 5%. If the deflection test is to be run using a rigid ball or mandrel, it shall have a diameter equal to 95% of the inside diameter of the pipe. The test shall be performed without mechanical pulling devices.

c. Video Camera Inspection: The City of Edinburg may perform a video inspection prior to final acceptance of the work. Any defects including, but not limited to, sagging, leakage, infiltration, joint separation, service connection defects or loss of roundness shall require repair in a manner prescribed by the Project Engineer and acceptable to the Director of Public Works.

13. Connection to main sanitary line after the installation of fiberglass manhole requires proper equipment to open existing main line in service. The City's Engineering Inspector must be present during the connection to active sewer lines.

14. Contractor may not enter any manholes without a self-contained breathing apparatus (SCBA), safety harness and tripod. All field personnel must be properly trained in their use.

15. Contractor must provide adequate shoring and trench protection in accordance with OSHA regulations. Failure to provide a safe work environment will result in immediate issuance of a stop work order until such time as the hazards are corrected.

B. Design Standards:

All sanitary sewer mains must be designed in accordance with Design Criteria for Sewage Systems by the Texas Commission on Environmental Quality (TCEQ) TAC 217, current edition, in regards to design, pipe selection, bedding, protection, capacities, fencing, and access.

C. Materials:

Approved material listing is provided on Exhibit "A". Any deviations must be approved in writing by the Director of Public Works. Requests for variations to pre-approved standard materials lists are subject to review by the City's Technical Specification Review Committee. All pipe, fittings and materials shall be new and in accordance with Standard Specifications:

1. P.V.C. or Polyvinyl Chloride:
   a. Gravity Uses:
      All Depths, SDR26 meeting requirements of ASTM specification D-3034; Sewer Services – SDR26 or SCH40
   b. Force mains - SDR 21
   c. Rubber gaskets to meet ASTM D-1869, D-361 or C-443.
   e. Manhole rings and covers shall have 32" (inch) opening and include the City of Edinburg seal and designated sanitary sewer.
   f. Manholes shall be fiberglass – ½" thickness (full length)

2. Pumps for Lift Station shall be equivalent or equal to:

   a. Self-priming – refer to Exhibit "A"
   b. Submersible – refer to Exhibit "A"

3.05 Connection to Wastewater Collection and Disposal Systems

A. Connection Required

Other than exceptions specified in the Unified Development Code – Division 8.400, *Utilities*, all subdivisions within the corporate limits and 2 mile ETJ, shall install all sewer lines to City Specifications and connect to the City of Edinburg Sewer Collection and Disposal System.

B. On-Site Sewerage Facilities (OSSF)

1. Only where specific exceptions are noted, OSSF systems shall be permitted in compliance with the requirements of the "Design Criteria for On-Site Sewage Facilities" by the Texas Department of Health and shall require the approval by the Hidalgo County Health Department.

2. Where OSSFs are proposed, the following conditions shall apply:

   a. Lots greater than net ½ acre (21,780 square feet), and less than 1 acre: Install sewer collection system to City Specifications and provide engineering data; or
   b. Lots of net 1 acre (43,560 square feet) or greater: Not required to install sewer collection system; or
   c. Where a water supply corporation holds the Certificate of Convenience and Necessity (CCN) for both water and sewer: Lots must be greater than net ½ acre (21,780 square feet); or
   d. Beyond the 2 Mile ETJ: Lots must be greater than net ½ acre (21,780 square feet).

3. Single family or multi-family residential dwellings with anticipated wastewater generations of no greater than 5,000 gallons per day must comply with 30 TAC Chapter 285.

4. Proposals for sewerage facility for the disposal of wastewater in the amount of 5,000 gallons per day or greater must comply with 30 TAC Chapter 217.

5. Setback Requirements for OSSF

   a. Dwelling or property line: 10-ft. minimum

b. Water supply, including potable water lines, wells, and cisterns: 150-ft. minimum

c. Watercourse: 50-ft. minimum. All systems within the water supply watershed shall meet the standards of the UDC, Section 4.211, *Riparian Buffers*

C. Organized Sewerage Facilities

1. Any proposed organized wastewater collection and treatment systems other than the City of Edinburg must be approved by the Director of Public Works *and* be permitted by the Texas Commission of Environmental Quality (TCEQ) in accordance with 30 TAC Chapter 305 and 217.

2. Any proposed disposal of wastewater by connecting to an existing permitted facility other than the City of Edinburg must provide a written agreement with the retail public utility. The agreement must demonstrate that:

   a. The retail public utility has or will have the ability to treat the total flow anticipated from the ultimate development and occupancy of the proposed subdivision for a minimum of 30 years.

   b. The subdivider has paid the cost of all fees associated with connection to the wastewater collection and treatment system so that service is available to each lot upon completion of construction of the wastewater facilities described on the final plat. Engineering plans for the proposed wastewater collection system must comply with 30 TAC Chapter 217.

D. Prohibited Systems

1. Pit privies and portable toilets are prohibited. Onsite sewerage facilities that do not meet wastewater treatment standards as developed by TECQ as set out in 30 TAC Chapter 285 are prohibited.

3.06 Approved Materials Listing

See Exhibit “A”

3.07 Sample Reimbursement Contract

See Exhibit “B”

3.08 Standards Water and Sewer Details:

The following details show the adopted standards required by the City which are included at the end of this section:

TABLE OF DETAILS:

Water:

W-1	Single Water Service Connection Details
W-2	Double Water Service Connection Details
W-3	Meter Service Detail
W-4	Water Standard Pipe Bedding Details
W-5	Thrust Blocks Details

W-6	Water / Sanitary Sewer Crossing Details
W-7	Fire Hydrant Installation Details
W-8	Valve & Valve Box Details
W-9	Typical Air Release Valve Installation Details
W-10	Flush Valve Detail
W-11	Cast Iron Meter Cover Detail
W-12	Water Tapping Sleeve and Valve Installation on Larger Pipe
W-13	Same Size Water Tapping Sleeve and Valve Installation
W-14	Method for filling New Water Line Prior to Chlorination and Testing
W-15	Meter Vault

Sanitary Sewer:

S-1	Residential Sanitary Sewer Service Details
S-2	Multi-Family and Commercial Sanitary Sewer Service Details
S-3	Fiberglass Manhole Details
S-4	Shallow Service Connection Detail
S-5	Deep Service Connection Detail
S-6	Double Deep Service Connection Detail
S-7	Sewer Standard Pipe Bedding Details
S-8	Utility Crossing at Existing Street Detail
S-9	Utility Line Bore Detail
S-10	Drain Ditch Crossing Section
S-11	Sewage Air Release Valve Detail
S-12	Manhole Ring and Cover Details

This Page Intentionally Left Blank

Exhibit “A”

TABLE OF CONTENTS

1. Valves
2. Fire Hydrants and Flush Out Valve Assembly
3. Tap saddles and tap sleeves
4. Meter Boxes and Lids
5. Corporation and Curb Stops
6. Straight Coupling X MID
7. Brass Fittings
8. Copper Tubing, Pipe and Fittings
9. Valve Boxes
10. Fittings
11. Restraints
12. Repair Couplings
13. Adapters
14. Resilient Wedge Gate Valve Specifications
15. Fire Hydrant Specifications
16. Water Meters

Pre-Cast Meter Vaults

Pumps for Lift Station

A. Self Priming
B. Submersible

1. **Valves**

A. Brass Gate Valves

• Sizes 2”-3”
• Style- FIP x FIP
• Manufacturers Name Product Number
1. Hammond IB- 645 (MUST BE NO LEAD COMPLIANCE)

• Comments: ***These products must have brass operating wheels***

B. Resilient Wedge Gate Valves

• Sixes- 4”-20”
• Styles - MJ, Flg, Flg x MJ
• Manufacturers name Product Number
1. American Flow Control AFC – 2500
2. Mueller A -2360

• Comments: ***These products must be trimmed in 304 stainless.***

C. Butterfly Valves

• Sizes- 16”-36”
• Styles – MJ, Flg., MJ x Flg.
• Manufacturers Name Product Number
1. Mueller B -3211
• Comments: ***This product must be epoxy coated inside and out and must have EPDM seat.***

2. Fire hydrants and Flush-out Assembly

A. Fire Hydrants

• Sizes- 3’, 3’6”, 4’, 4’6”, 5’, 5’6”, 6’
• Styles- MJ, Flg, Flg x MJ
• Manufacturers Name Product Bury Size / MJ Number
1. *Mueller* Super Centurion, 250

3’	A422
4’	A422
5’	A422

2. *American Flow Control 5 ¼”* B-84-B 3’0” East Jordan, 4’0” Water Master 5CD250 Hydrant
3’0”
4’0”
5’0”

3. *Kenedy*

3’0”

4'0"
5'0"
Guardian K81D

• Comments*: **All fire hydrants must be painted red from the factory and be trimmed in 304 stainless.***

B. Flush valve assembly

• Size- 2"
• Manufactures Name Product Bury Size Model Number
1. *The Kupferle Foundry Company* Main Guard 3' #77

• Comments: ***This product is to be used at the end of all dead end mains. Any other variations of flush out valve assembly must be submitted and approved by the City of Edinburg prior to installation.***

3. Tap Saddles and Tap Sleeves

A. Brass Tap Saddles for C-900 PVC

• Sizes- 2"-12"
• Outlet size – 1"
• Style- O.D. controlled / Single Strap
• Manufacturers Name Product Number
1. *Mueller H 13000 BR 1B Series*
2. *Jones J - 996 J-975 Series*
3. *Ford 590. 101 B*
• Comments: ***This product must be brass, no exceptions. With 304 Stainless Steel Straps***

B. Brass Tap Saddles for C-900 PVC

• Sizes- 4"- 12"
• Outlet size- 2"
• Style – double band or O.D. controlled
• Manufacturers Name D.B Product Number O.D.C Product Number
1. *Mueller - 13000 BR2B Series*
2. *Jones J – 979*
3. *Ford 202 – B N/A*

• Comments: ***This product must be brass, no exceptions. With 304 Stainless Steel Straps***

C. Mechanical Tapping Sleeve

- Size – Size on Size 4'24"
- Type – Mechanical Joint Tapping Sleeve
- Manufacturers – Muller – H-615

D. Tap Sleeves Size on reducing size

• Sizes – 4”-24”
• Outlet sizes – 4”-12”
• Type – Fusion bonded Epoxy
• Manufacturers Name Product Number
1. *Smith Blair 622*
2. *JCM 412*
3. Ford –FTS/FTSC

• Comments: ***This product must be trimmed in 304 stainless steel. Epoxy Coated Tapping Sleeve with Flexi Blue Epoxy Coated Flange.***

4. Meter Boxes and Lids

A. Meter Box Residential

• Style – Oval
• Type – Plastic body with plastic lid with lock lid.
• Manufacturers Name Product Number
1. Mid States
2. DFW 1017
• Comments: ***Lid must have lock lid.***

B. Large Rectangle Meter Box

• Sizes – 15” x 27”
• Style – Rectangular double wall iron box with cast iron lid /with open HASP.
• Manufacturers Name Product Number

1. Star pipe –MB - 0021

• Comments: ***Lids must be manufactured with the City of Edinburg logo.***

C. Meter Box Lids

• Style – Rectangular and oval
• Type – Plastic
• Manufactures Name

1. East Jordan DFW Plastics – 1017 Model
2. Sigma
3. Star
• Comments: ***Lids must have lock lid.***

5. Corporation and Curb Stops

A. Brass Corporation Stop

• Sizes –3/4” –1”
• Style – MIP x Flair / Compression
• Manufacturers Name Product Number
1. *Mueller – E-25029 X Comp NL B – 250025 X Flair NL*
2. *Jones – J – 1929 X Flair NLJ – 1936 X Comp NL*

3. *Ford – F-1100 – 3 NLF 700-34 NL*
4. A-Y McDonald – 4704 X Flair NL 4704 – 33 X Comp NL

B. Brass Corporation Stop

• Size – 2”
• Styles – MIP x MIP , MIP x FIP
• Manufacturers Name MIP x MIP Product Number FIP x FIP Product Number

1. *Mueller B - P-25028 X Comp NL B 25025 X Flair NL*
2. *Jones J – J - -1929 X Flair NLJ-1936 X Comp NL*
3. *Ford FB 500 – 7 FB700-7 NLFB 1102-7NL*
4. *A-Y McDonald – 470NL 4704-33 NL*

• Comments***: MIP x compression is an option on this product, and all products must be no lead compliance.***

C. Brass Corporation Stop

• Size – 1”
• Style – MIP x Flare
• Manufactures Name Product Number

1. Mueller H – 15025 NL OK
2. Jones J – 1505 NL OK
3. Ford F – 700 4 NL

• Comments: ***MIP x Compression is an option on this product, and all products must be no lead compliance.***

D. Brass Angle Stops

• Size – 1”, ¾”
• Style – 90 degree angle Flare x FIP
• Manufactures Name Product Number

1. *Mueller B - B24255 NL*
2. *Jones J –J 1925 W NLJ-1926 W NL*
3. *Ford BAZ 1 – 444 W KV43-33 W NL-KV43 – 342 W NLKV43 – 444 W NL*
4. *A-Y McDonald 4602 – 33 NL*

• Comments: ***Compression x swivel is an option in this product, and all products must be no lead compliance.***

E. Multi-Service “Y”

• Size –2” x 1”
• Style – FIP x FIP
• Manufactures Name Product Number

1. *McDonald's Y 4765 NL2*
2. *Ford Y11-474 NL*

6. <u>Straight Coupling X MIP</u>

A. Coupling

- Size – 1", ¾"
- Styles – MIP x COMPRESSION
- <u>Manufacturers Name Product Number</u>
  1. *Mueller H - 15425 NL – 15428 NL*
  2. *Jones J - 1531 –J- 2605 NL*
  3. *Ford C-84 - 33NL*

- Comments: ***Flare is an option on this product, and all products must be no lead compliance.***

B. <u>Straight Coupling</u>

- Size – 2"
- Style – MIP x Compression
- <u>Manufacturers Name Product Number</u>
  1. Mueller P - 15428 NL 15425 NL
  2. Jones J - 2605 NL
  3. Ford C 84 -77

- Comments: ***To be used only when 2" services are not soldered, and all products must be no lead compliance.***

C. Brass Reducer Bushings

- Sizes – 1"x ¾", 2" x 1", 2" x 1 ½", 1 ½" x 1", 1 ½" x ¾", 2" x ¾"
- Style – FIP x FIP Ford – C – 18-47

- Comments: ***All Products must be no lead compliance.***

D. Brass Meter Couplings

- Sizes – ¾", 1"
- Style – MIP x Swivel Ford – C – 18-47
- <u>Manufacturers Name Product Number</u>
  1. *Mueller H 10891 –12 NL*
  2. *Jones J-134 NL*
  3. *Ford C 38- 23-2.5 NL-C38-13-2.188 NL*

- Comments: ***All Products must be no lead compliance.***

E. Brass Nipples

• Sizes – ¾”- 2”
• Style – MIP x MIP
• Lengths – 1” –5”

7. <u>All brass nipples must be copper</u>

• Style – FIP x FIP

8. <u>Copper Tubing, Pipe and Fittings</u>

A. Copper Tubing

• Sizes – ¾”, 1”
• Type – “K” soft

B. Rigid Copper Pipe “Type “L” Hard Copper”

• Size – 2” ,3”
• Type – “L” hard

C. Copper Fittings

• Size – 2” ,3”
• Type – Copper

• Comments: ***To be used with 2” rigid Hard copper pipe Type “L”.***

9. <u>Valve Boxes</u>

• Size – 19”- 22” (Small)
• Type – Adjustable
• <u>Manufacturers Name Product Number</u>

1. Tyler/Union 6850 must be domestic and heavy duty standard drop lid.
2. Star VB 0002 must be domestic and heavy duty standard drop lid.
3. East Jordan Iron 8550 must be domestic and heavy duty standard drop lid.

10. <u>Fittings</u>

• Sizes – 4”- 36”
• Style – MJ, FLG , FLGxFIG
• Type – Ductile iron AWWA C-153 and AWWA C-110 – ASTM A536 350 PSI W.W.P.
• <u>Manufacturers Name</u>

1. *Tyler/Union*

- ***Comments: All products must be domestic, and all imports will not be accepted. P401 coating must be added when working on Wastewater, and Lift Station Projects.***

11. <u>Restraints</u>

• Sizes – 4” – 36”
• Style – PVC, Ductile iron
• Manufacturers Name Product Number

1. PVC Grip 3500
2. PVC Star Grip 4000
3. Ford UFR - 1500
4. Ebaa Mega Lug

• Comments: ***When using all thread rod as a means of restraint stainless steel must be used. All products must be domestic, and all imports will not be accepted.***

12. Repair Couplings

A. Repair Couplings

• Sizes – 4” – 36”
• Style – Cast compression x compression
• Manufacturers Name Product Name

1. *Romac- MACRO or XR 5012*
2. *Smith Blair Quantum 444,421*
3. *Ford Ultra Flex -10190-30*

• Comments: ***These products are only to be used when PVC repair couplings are not applicable, 2 bolt coupling to be an exception to the product.***

B. PVC

13. Adapters

• Sizes – 4”- 36”
• Style - Flange x MJ, MJ x MJ
• Manufacturers Name
1. *Mueller*
2. *Smith Blair*
3. *Ford*
• Comments: ***Must have 304 stainless trim and be Epoxy/nylon coated. There are some exceptions in some these products due to the variations of the way these certain products are manufactured.***

14. RESILIENT WEDGE GATE VALVE SPECIFICATION

The resilient seat gate valves 4-12” shall fully comply with the latest revision of AWWA C509 or C515, and shall also be UL listed and FM approved. The valves shall be tested and certified to ANSI/NSF 61. Valves shall include the following specific design criteria:

- The valve shall have a 250 psig working pressure.
- Each valve shall be factory seat tested to 250 psig and shell tested to 500 psig.
- The valve type shall be non-rising stem (NRS) or outside screw and yoke (OS&Y) as specified.
- The valve shall have an arrow cast on the operating nut or hand wheel showing opening direction.
- All valves shall be open left.
- The NRS valves shall be provided with a 2" square operating nut and OS&Y valves shall be provided with a hand wheel. The bolt that attaches the operating nut to the stem shall be recessed into the operating nut so as not to interfere with valve wrench operation.
- The valves shall have bolts and nuts for the stuffing box and bonnet and operating nut with one of the following compositions:
  1. Type 304 stainless steel
  2. Type 316 stainless steel
- The valve stem shall be made of bronze ASTM B-132 alloy C67600 bar stock material. The stem material shall provide a minimum 70,000 psi tensile strength with 15% elongation and yield strength of 30,000 psi.
- The stem shall have at least one "anti-friction" thrust washer above and below the stem collar.
- The NRS valves shall have a stuffing box that is o-ring sealed. Two o-rings shall be placed above and one o-ring below the stem thrust collar. The thrust collar shall be factory lubricated. The thrust collar and its lubrication shall be isolated by the o-rings from the waterway and from outside contamination providing permanent lubrication.
- The valve body, bonnet, stuffing box, and disc shall be composed of ASTM A-126 Class B grey iron or ASTM A395 or A536 ductile iron.
- The valves shall have an end configuration of MJ or FLG with restraining capabilities.
- The valve disc and guide lugs must be fully (100%) encapsulated in SBR ASTM D2000 or EPDM rubber material. The peel strength shall not be less than 75 ppi. Guide caps of an Acetal bearing material shall be placed over solid guide lugs, guides placed over bare metal are not acceptable.
- The valves shall have all internal and external ferrous surfaces coated with fusion bonded epoxy coating of 10 mils nominal thickness and coating shall conform to AWWA C550.
- The tapping valves shall have an inlet flange conforming to ANSI B16.1 Class 125. The valve inlet flange shall have a machined raised face complying with MSS SP-60.The seat opening of the tapping valves shall be at least .30" larger than the nominal pipe size.
- The valves shall be warranted by the manufacturer against defects in materials or workmanship for a period of 10 years from the date of purchase.
- The manufacturing facility for the valves must have current ISO certification.
- The NRS valves shall be MUELLER A2360 series or AFC 2500 series
- The OS&Y valves shall be MUELLER R2360 series or AFC 2500 series
- The NRS tapping valves shall be MUELLER T2360 series or AFC 2500 series

Note: ***The City reserves the right to accept only those materials, which are in full compliance with these specifications and deemed most advantageous to its interests. Failure to comply with any of these above requirements is sufficient cause for rejection of proposed valves.***

15. FIRE HYDRANT SPECIFICATIONS

Fire hydrants shall meet or exceed AWWA C502, latest revision. Rated working pressure shall be 250 p.s.i., and hydrants shall include the following specific design criteria:

- The main valve shall be of the compression type.
- The hydrant must have a traffic breakaway feature.
- Traffic feature must be designed for easy 360-degree rotation of nozzle section during field installation.
- The hydrant must open left and be marked on the hydrants bonnet to indicate the specified opening direction.
- The main valve opening shall not be less than 5 ¼" and be designed so that removal of all working parts can be accomplished without excavating.
- The bronze seat shall be threaded into mating threads of bronze.
- The draining system of the hydrant shall be bronze and positively activated by the main operating rod.
- The lower half of the main operating rod shall constructed of 304 stainless steel as a minimum.
- Hydrant drains shall close completely after no more than three turns of the operating nut.
- There shall be a minimum of 2 internal ports and minimum 2 drain port outlets to the exterior of the hydrant.
- Drain shutoff shall be direct compression closure.
- The hydrant shall be 2 ½" NST threads on hose nozzles and 4 ½" NST threads on pumper nozzle.
- The hydrants operating nut shall be 1 ¼" pentagon shape.
- The interior of the shoe including the upper and lower valve plates shall have a protective coating that meets AWWA C-550 standards.
- All stem nuts shall be constructed of brass or 304 stainless steel as a minimum.
- All internal and external dressings such as pins, springs, lock washers, nuts and bolts etc. must be minimum of 304 stainless steel.
- Hydrants shall be painted red by the manufacturer.
- Hydrant shoe inlet size shall be 6" and connection type shall be push on or MJ and must have restraining capabilities.
- Hydrants shall be warranted by the manufacturer against defects in material or workmanship for a period of 10 years from the date of manufacture.
- Hydrants shall be Mueller Super Centurion 250 or AFC B-84-B
- Friction loss shall not exceed 3.0 p.s.i.g. at 1000 gpm through 4 ½" pumper nozzle.

Note: ***The City reserves the right to accept only those materials, which are in full compliance with these specifications and deemed most advantageous to its interests. Failure to comply with any of these above requirements is sufficient cause for rejection of proposed hydrants.***

16. WATER METERS

SPECIFICATIONS
C-700 STANDARD COLD WATER METERS

Specifications are for ¾" x ⅝ thru,1", 1½" 2" Standard Water Meters. Herein are minimum requirements which are intended to govern, in general, the size and types of materials desired. The City of Edinburg reserves the right to evaluate minor exceptions to these specifications.

Scope

All meters furnished shall be magnetic drive, sealed registers, nutating disc positive displacement piston type designed for water works services. It is the intent of the City to minimize the repair of any meters furnished under these specifications.

Applicable Specifications

1. Except as otherwise modified or supplemented herein, AWWA Standard C-700 (or the latest revision thereof) shall govern the materials, design, manufacture and testing of all meters furnished under these specifications.

Material Requirements

1. The main case for all sizes shall be of no-lead high copper alloy ANSI/NSF 61 cerfitied. All meters shall have cast on them, in raised characters, the size and direction of flow through the meters.

2. The measuring chamber shall be unitized construction (i.e. complete with measuring element, calibration devised and registered in one assembly). The measuring chamber shall be capable of operating within its accuracy limits without recalibration when transferred from one main case to another. The measuring element shall be mounted horizontal stationary shaft with bearings and essentially weightless in water.

3. The measuring chamber or center section shall be self contained units easily removed from main case.

4. Main case connections: Shall be no-lead high copper alloy, straight.

Register

1. Register shall be affixed to the upper part of the meter case in such a way as to insure that it will be tamper resistant. Meter case must have stainless steel tamper resistant torex head screw.

2. Registers shall be a "Sealed Register" type. Shall read in gallons and have a large test or sweep hand, and shall be equipped with low flow indicators.

3. Register shall be magnetically driven; low torque, high resolution low flow leak detection straight reading type; hermetically sealed against fogging, moisture, dirt, and corrosion; and mechanically unconnected from the measuring components.

4. The register lens shall be of a high strength heat tested glass to minimize breakage.

5. The register box and lid shall be made of bronze with locking hasp as standard equipment.

6. In the event that special tools are required to maintain maintenance on a meter, the bidder shall furnish a sufficient supply at no cost.

Performance and Test Requirements

1. The manufacturer shall submit a letter of certification that new meters will test accurate as designated by AWWA Standard C-700 or latest revision.

Guarantee

1. The new meters furnished under this contract shall meet the required new meter accuracy standards as established by AWWA Standards C-700, latest revision, for a period of one year from date of receipt.

2. Each bidder shall state the type and model of meter quoted, as listed in his catalogue, and literature shall be furnished to the City of Edinburg at the time bid is submitted.

3. Meter quoted shall have been operational in a municipal distribution system for a minimum of five (5) years.

4. Meters that fail due to deterioration of metal parts used in the manufacture will result in a $25.00 back charge to the supplier to cover costs of the City of Edinburg removing and reinstalling the meter.

SPECIFICATIONS
COLD WATER TURBO METERS

Specifications are for 1”1/2 thru 6”” Turbo Water Meters. Herein are minimum requirements which are intended to govern, in general, the size and types of materials desired. The City of Edinburg reserves the right to evaluate minor exceptions to these specifications.

Scope

All meters furnished shall be magnetic drive, sealed registers, turbine type designed for water works services. It is the intent of the City to minimize the repair of any meters furnished under these specifications.

Applicable Specifications

1. Except as otherwise modified or supplemented herein, AWWA Standard C-701 (or the latest revision thereof) shall govern the materials, design, manufacture and testing of all meters furnished under these specifications.

Material Requirements

1. The main case shall be of bronze material and lead free. Meters shall have cast on them, in raised characters, and the size and direction of flow through the meters.

2. The measuring chamber shall be unitized construction (i.e. complete with measuring element, calibration devised and registered in one assembly). The measuring chamber shall be capable of operating within its accuracy limits without recalibration when transferred from one main case to another. The

measuring element shall be mounted horizontal stationary shaft with bearings and essentially weightless in water.

3. The measuring chamber or center section shall be self contained units easily removed from main case.

4. All external bolts, nuts and washers shall be of a non-corrosive water works bronze or stainless steel and be easily removed from the main case.

5. Main case connections: Flanges on the1”1/2 thru 2” meters shall be oval. Meters shall be furnished with two (2) bronze companion flanges. And on the 3” thru 4” size meters shall be round faced Also, each respective meter should come with inside iron pipe thread, bronze bolts, and nuts and gaskets.

Register

1. Register shall be affixed to the upper part of the meter case in such a way as to insure that it will be tamper resistant. Meter case must have stainless steel tamper resistant torex head screw.

2. Registers shall be a “Sealed Register” type. Shall read in gallons and have a large test or sweep hand, and shall be equipped with low flow indicators.

3. Register shall be magnetically driven; straight reading type; hermetically sealed against fogging, moisture, dirt, and corrosion; and mechanically unconnected from the measuring components.

4. The register lens shall be of a high strength heat tested glass to minimize breakage.

5. The register box and lid shall be made of bronze with locking hasp as standard equipment.

6. In the event that special tools are required to maintain maintenance on a meter, the bidder shall furnish a sufficient supply at no cost.

Performance and Test Requirements

1. The manufacturer shall submit a letter of certification that new meters will test accurate as designated by AWWA Standard C-701 or latest revision.

Guarantee

1. The new meters furnished under this contract shall meet the required new meter accuracy standards as established by AWWA Standards C-701, latest revision, for a period of one year from date of receipt.

2. Each bidder shall state the type and model of meter quoted, as listed in his catalogue, and literature shall be furnished to the City of Edinburg at the time bid is submitted.

3. Meter quoted shall have been operational in a municipal distribution system for a minimum of five (5) years.

4. Meters that fail due to deterioration of metal parts used in the manufacture will result in a $25.00 back charge to the supplier to cover costs of the City of Edinburg removing and reinstalling the meter.

COMPOUND WATER METER SPECIFICATIONS

CLASSIFICATION – These specifications cover a contract for Cold Water Meters, 2" thru 6: Compound Water Meters. Included herein are minimum requirements which are intended to govern, in general, the size and types of Materials desired. The City of Edinburg reserves the right to evaluate minor exceptions to these specifications

CONFORMANCE TO STANDARDS
The meters shall meet or exceed all requirements of ANSI/AWWA Standard C701 and C702 for Class II compound and turbine meter assemblies. Each meter assembly shall be performance tested to ensure compliance.

MAINCASES
The meter maincase shall be of epoxy coated ductile or bronze material. All meters shall have cast on them, in raised characters, the size and direction of flow through the meter.

PERFORMANCE
The meter assembly shall have performance capability of continuous operation up to the rated maximum flows as listed below without affecting long-term accuracy or causing any undue component wear. The meter assembly shall also provide a 25% flow capacity in excess of the maximum flows listed for intermittent flow demands. Maximum headloss through the meter / strainer assembly shall not exceed those listed in following table per meter size.

MEASURING CHAMBER
The measuring chamber shall be unitized construction (i.e. complete with measuring element, calibration devised and registered in one assembly). The measuring chamber shall be capable of operating within its accuracy limits without recalibration when transferred from one main case to another. The measuring element shall be mounted horizontal stationary shaft with bearings and essentially weightless in water

CONFORMANCE TO STANDARDS

REGISTER
The Register shall be affixed to the upper part of the meter case in such way as to insure that it will be tamper resistant. Meter case must have stainless steel tamper resistant torex head screw.
Register shall be a single billing "Sealed Register" type; shall read in gallons and have a large test or sweep hand.
Register shall be magnetically driven; straight reading type; hermetically sealed against fogging, moister, dirt, and corrosion; and mechanically unconnected from the measuring components.
The register lens shall be of a high strength heat tested glass to minimize breakage.

MAXIMUM OPERATING PRESSURE
The meter assembly shall operate properly without leakage, damage, or malfunction up to a maximum working pressure of 200 pounds per square inch (psig).

STRAINERS
The meter strainer shall be integral and cast as part of the meter's maincase. The strainer's screen shall have a minimum net open area of at least two (2) times the pipe opening and be a V-shaped configuration for the purpose of maintaining a full unobstructed flow pattern. The strainer body shall be a coated ductile iron fusion-bonded epoxy identical to that of the meter's maincase. All fasteners shall be stainless steel capable of maintaining the following static pressure rating.

CONNECTIONS
Flanges for the 2" size meter assemblies shall be of the 2-bolt oval flange configuration. The 3", 4", 6", 8" and 10" size meter assemblies shall have flanges of the Class 125 round type, flat faced and shall conform to ANSI B16.1 for specified diameter, drilling and thickness.

CERTIFICATIONS AND MARKINGS
All sizes of meter shall display the sizes and in addition to the manufactures serial numbers.

GUARANTEE AND MAINTENANCE
Meters shall be guaranteed against defects in material and workmanship for a period of one (1) year from date of shipment. In addition, the meter supplier shall submit nationally published literature clearly outlining its factory maintenance program and current price schedule covering complete measuring chamber exchange. In the event that special tools are required to perform maintenance on a meter, the bidder shall furnish a sufficient supply at no cost to the City.

17. Pre- Cast Concrete Meter Vault

Concrete: Class 2 concrete with design strength of 4500 PSI at 28 days. Unit shall be of monolithic construction at floor and first stage of wall with sectional riser to required depth.
Reinforcement: Grade 60 reinforced. Steel rebar conforming to ASTM A615 on required centers or equal.

Steel Cover: All steel fabrication shall be with accordance to AWA D1.1. Steel shall be ASTM A36 carbon steel, and hot dipped galvanized after fabrication in accordance to ASTM A123. Standard cover shall be rated at 50 PSF.
Park USA is an approved Vendor for the City of Edinburg on all 4" and above Pre-Cast meter vaults.

Size	Bypass	L1	W1	H1	Weight LBS
4"	2"	11'-6"	6'-0'	4'-3"	15,000
6"	2"	13"-6"	6'-0"	4'-3"	15,550

18. Pumps for Lift Stations

A. Self Priming

B. Submersible

- ABS
- Flyght

Exhibit “B”

CITY OF EDINBURG
SUBDIVISION
IMPROVEMENTS
REIMBURSEMENT CONTRACT
Prepared by: ***(Engineering Firm)***

STATE OF TEXAS §
COUNTY OF HIDALGO §

THIS CONTRACT is made and entered into by and between the CITY OF EDINBURG, a Municipal Corporation, as authorized by Resolution of its Board of Commissioners, hereinafter called the CITY and (***Owner, President of Name of Corporation)***, hereinafter called DEVELOPER.

WITNESSETH:

WHEREAS, DEVELOPER is the developer of the following described property: (***Subdivision Name)*** and has extended a (***Type of System)*** as shown on a plans for said subdivision development prepared by ***(Engineering Firm Name)*** and dated ***(Date)*** together with all necessary appurtenances herein called the IMPROVEMENTS from its present terminus to the above described property as approved by the Planning and Zoning Commission on ***(Date)***; and

WHEREAS, the actual cost of such IMPROVEMENTS and the amount to be paid therefore respectively by the CITY and DEVELOPER is shown on Exhibit "A" attached hereto and made a part hereof; and

WHEREAS, in keeping with City policy, individuals who seek the extension of such IMPROVEMENTS to or adjacent to their property must advance the cost of construction thereof, and any individual who wishes to utilize the IMPROVEMENTS must participate in the original cost by reimbursing the DEVELOPER through the City within ten years of the completion of those lines, subject to a 15% administrative fee retained by the City or payment to the CITY OF EDINBURG after that date.

NOW, THEREFORE, IT IS AGREED BY AND BETWEEN THE PARTIES AS FOLLOWS:

DEVELOPER has installed ***(Type of System)*** along with other improvements at a cost of ***(Actual Cost Amount)*** for the developer, which IMPROVEMENTS shall become the property of the CITY.

WHEREAS, the installation of the above-described IMPROVEMENTS has been completed and is operational, and the CITY has approved their installation, the CITY promises and agrees to reimburse to the DEVELOPER, according to the schedule shown as Exhibit "A" which refers to the area map labeled EXHIBIT “B” attached hereto and made a part hereof, any pro rata share of the cost of the IMPROVEMENTS that shall be paid by any other property owners to the CITY, upon approval of a subdivision plat or upon application of the City permits, services or issuance of a certificate of compliance for property not subject to the approval of a subdivision plat which results in the use of the improvements installed by the DEVELOPER provided that the reimbursement occurs within ten (10) years of the date of completion of the IMPROVEMENTS. After that date reimbursements will continue on the same basis, but such reimbursed amounts will be retained by the City of Edinburg to offset bookkeeping costs and maintenance by the CITY.

CITY and **DEVELOPER** agree that this Reimbursement Contract is full assignable. Such assignment shall become effective as the City upon receipt of the notice to CITY of such assignment as set forth herein.

Any notice to be given herein shall be in writing and shall be given by depositing same with the United States Postal Service, postage prepaid, via first class mail and certified, with return receipt requested. Notice required to be given herein shall be addressed as follows:

TO CITY:

Director of Public Works / Director of Planning and Zoning
CITY OF EDINBURG
415 W. University Dr.
Edinburg, Texas 78541

TO DEVELOPER:

Owner, President
NAME OF CORPORATION
Address
City, Texas Zip

DEVELOPER further agrees to give written notice to City of any and all changes of mailing address of DEVELOPER. In the event of assignment of this Reimbursement Contract, Assignee shall give written notice to CITY of Assignee's mailing address, and all subsequent changes thereof. In the event that reimbursement is made to CITY for the IMPROVEMENTS and CITY is unable to give notice of such reimbursement to DEVELOPER or DEVELOPER'S Assignee, due to the failure of DEVELOPER of Assignee to provide CITY with written notice of current mailing address as required herein above, CITY will publish a Notice of Reimbursement to the DEVELOPER of Assignee, at the address as provided to CITY, on one (1) occasion, in a newspaper of general circulation within the CITY OF EDINBURG.

If, written thirty (30) days of publication of said Notice of Reimbursement, the party named therein fails to give notice to CITY of that party's current mailing address, all funds then held by CITY for reimbursement of the IMPROVEMENTS shall become property of the City, without recourse by any party otherwise entitled to such funds by virtue of this Reimbursement Contract.

WITNESS OUR HANDS in duplicate originals this_____day_____of, 20____.

REVIEWED AND APPROVED

BY:_____
Director of Public Works

CITY OF EDINBURG

BY:_____
City Manager

ATTEST:

BY:_____
City Secretary

APPROVED AS TO FORM:

BY:_____
City Attorney

Developer:

By: _____

Name:_____

Title: _____

NOTES:

1. METER AND METER BOX TO BE PROVIDED BY CONTRACTOR. (MULTI-FAMILY ONLY)
2. FOR MORE THAN FOUR-PLEX OR FOUR COMMERCIAL BUILDING USE 4" BALL CORP. VALVES, 4" TYPE "K" COPPER AND 8" PVC CASING.
3. 4' MIN. COVER FOR WATER MAINS 5' MIN. FOR ALL ARTERIAL OR GREATER CLASSIFICATIONS
4. COMMERCIAL INSTALLATIONS TO BE 2" SINGLE SERVICE UNLESS OTHERWISE APPROVED BY THE CITY ENGINEER.

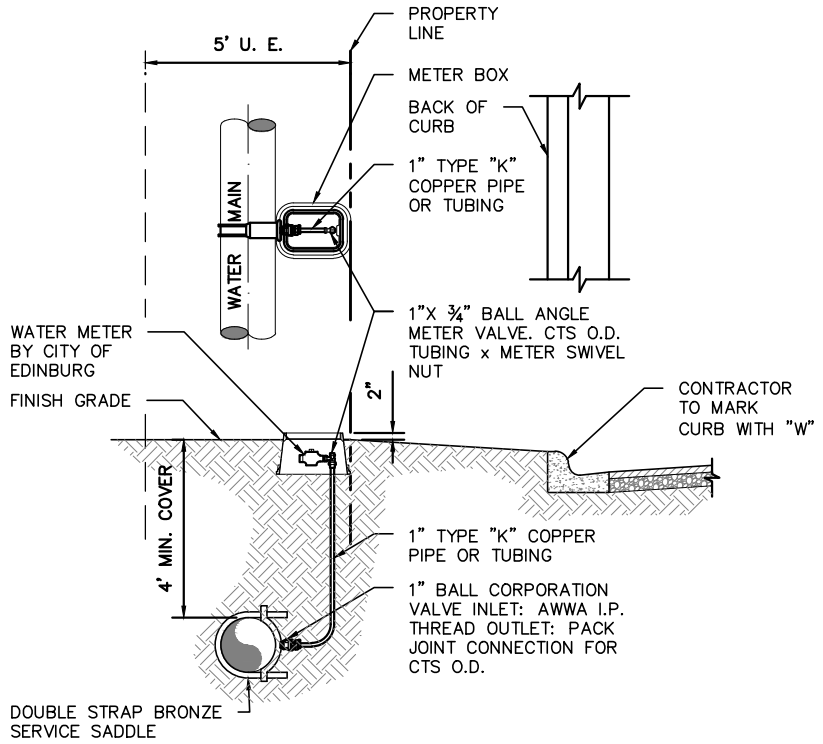

TYPICAL SINGLE WATER SERVICE CONNECTION

(NEAR SIDE)

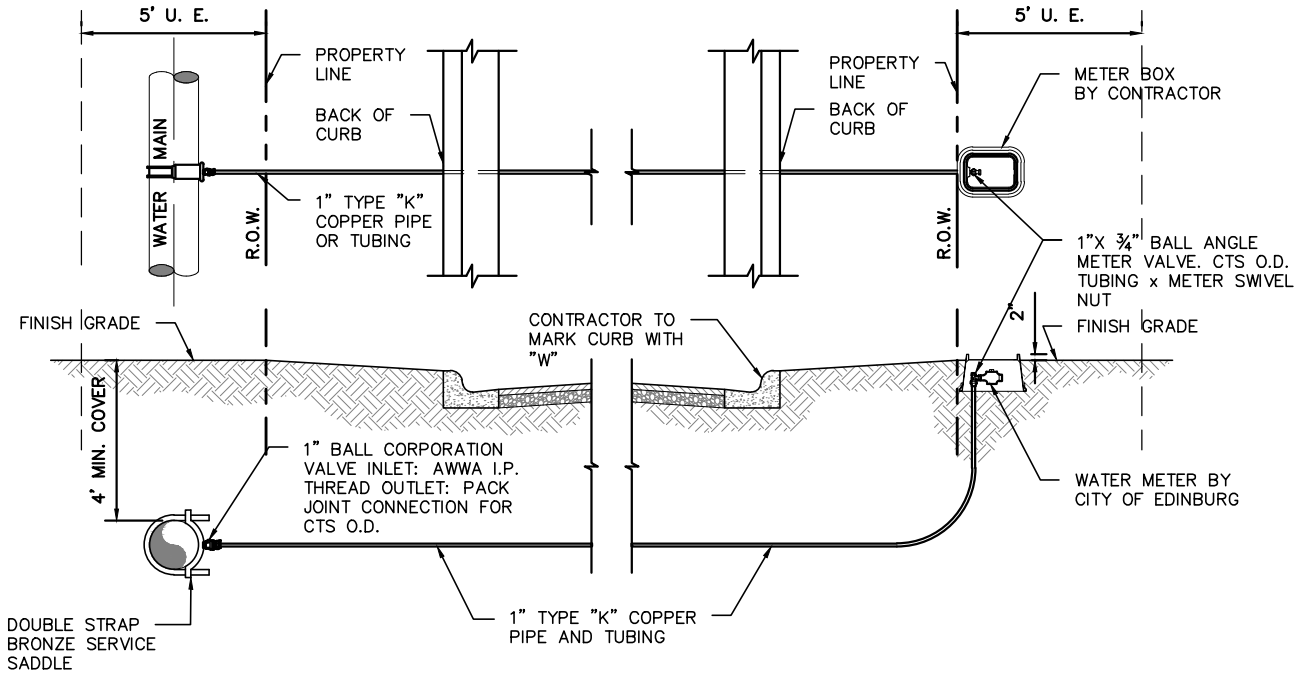

TYPICAL SINGLE WATER SERVICE CONNECTION

(FAR SIDE)

W-1	SINGLE WATER SERVICE CONNECTION DETAILS	THE CITY OF EDINBURG PUBLIC WORKS DEPARTMENT
	SCALE: N.T.S.	REVISED: JAG
	DATE: JANUARY, 2014	DRAWN BY: JAG/RMM

Jan 15, 2014 – 9:47AM

NOTES:

1. METER AND METER BOX TO BE PROVIDED BY CONTRACTOR. (MULTI-FAMILY ONLY)
2. FOR MORE THAN FOUR-PLEX OR FOUR COMMERCIAL BUILDING USE 4" BALL CORP. VALVES, 4" TYPE "K" COPPER AND 8" PVC CASING.
3. 4' MIN. COVER FOR WATER MAINS 5' MIN. FOR ALL ARTERIAL OR GREATER CLASSIFICATIONS
4. COMMERCIAL INSTALLATIONS TO BE 2" SINGLE SERVICE UNLESS OTHERWISE APPROVED BY THE CITY ENGINEER.

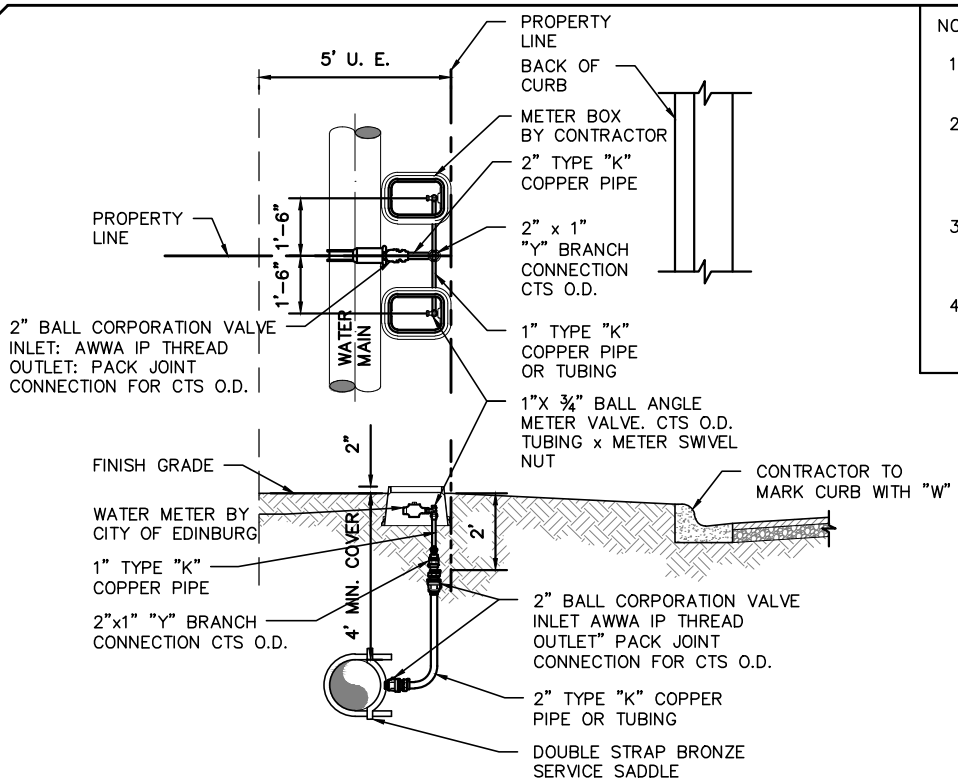

TYPICAL DOUBLE WATER SERVICE CONNECTION

(NEAR SIDE)

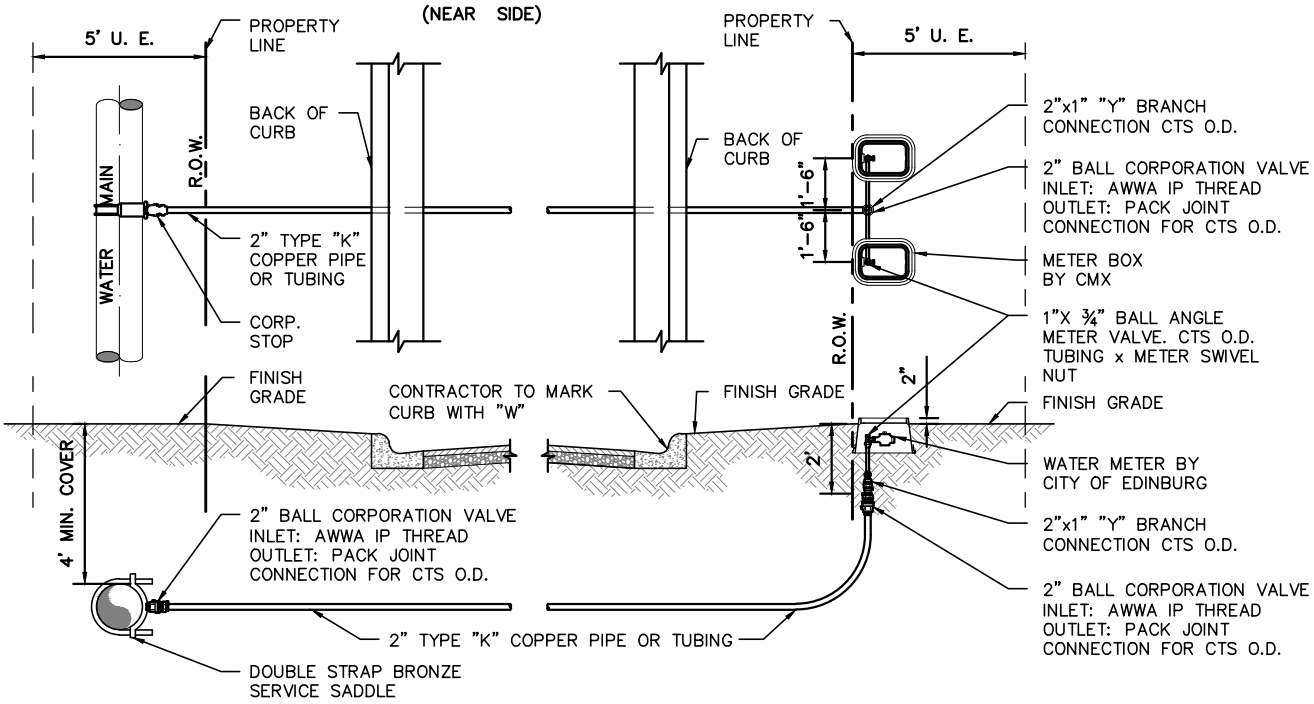

TYPICAL DOUBLE WATER SERVICE CONNECTION

(FAR SIDE)

W-2	DOUBLE WATER SERVICE CONNECTION DETAILS	THE CITY OF EDINBURG PUBLIC WORKS DEPARTMENT
	SCALE: N.T.S. / REVISED: JAG	
	DATE: JANUARY, 2014 / DRAWN BY: JAG/RMM	

Jan 15, 2014 - 9:54AM

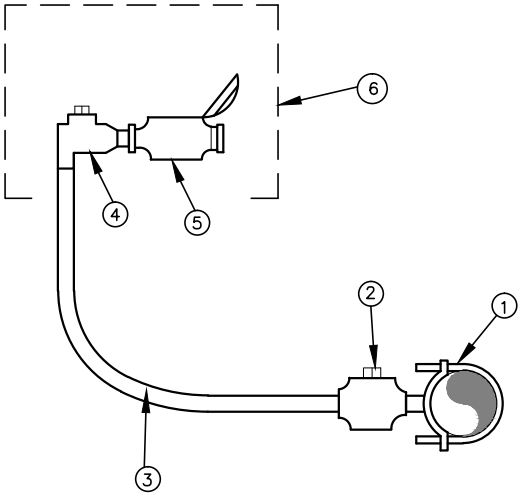

2" METER SERVICE

1. X" x 2" DOUBLE STRAP BRASS SADDLE
2. 2" BALL CORP. MIPX C.T.S.
3. 2" COPPER TUBING TYPE "K"
4. 2" BRASS ANGLE STOP
5. WATER METER NY CITY OF EDINBURG
6. LAGE C.I. METER BOX WILL BE PROVIDED BY CITY OF EDINBURG.

* ALL WATER METERS 4" AND ABOVE SHALL BE PLACED IN A CONCRETE METER VAULT APPROVED BY THE CITY OF EDINBURG.

W-3	METER SERVICE DETAIL		THE CITY OF EDINBURG PUBLIC WORKS DEPARTMENT
	SCALE: N.T.S.	REVISED: JAG	
	DATE: JANUARY, 2014	DRAWN BY: RMM	

Jan 15, 2014 – 9:47AM

NOTE:

WHEN UTILITY LOCATED WITHIN CITY ROW, ALL BACK FILL IS SUBJECT TO INSPECTION AND APPROVAL BY THE CITY ENGINEER'S OFFICE

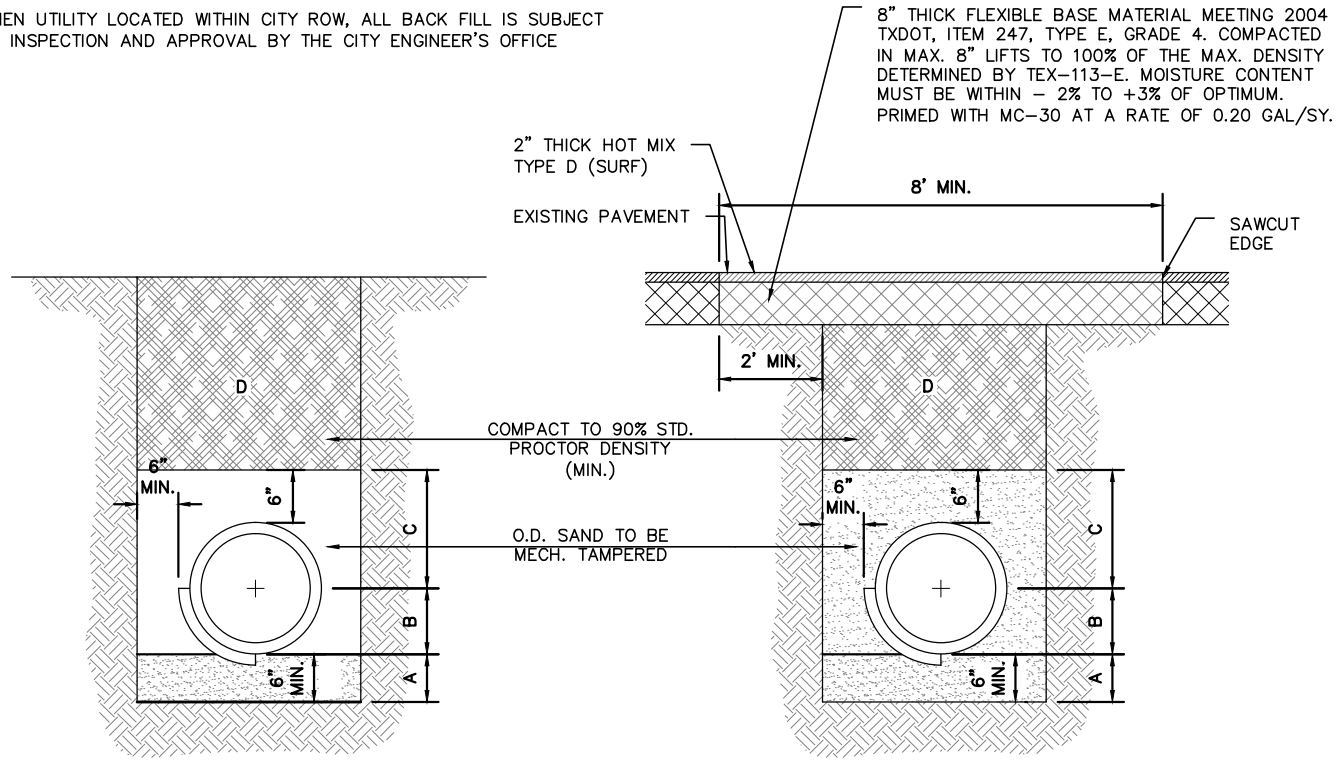

STANDARD PIPE BEDDING (MAIN & SERVICE LATERALS)

APPLICABLE BENEATH FUTURE/UNPAVED STREETS

A. SAND BEDDING PLACED BEFORE PIPE IS LAID TO FLOW LINE OF PIPE (MIN. THICKNESS = 6")

B. SAND BACK FILL PLACED AFTER PIPE IS LAID FROM BOTTOM OF PIPE TO SPRING LINE OF PIPE. (4" LIFTS, MECH. TAMPED)

C. SAND BACK FILL PLACED FROM SPRING LINE OF PIPE TO 6" ABOVE TOP OF PIPE. (6" LIFTS, MECH. TAMPED)

D. FILL TRENCH WITH SELECT BACKFILL, WITH 12" LIFTS COMPACT TO 90% STD. PROCTOR.

FOUNDATION PREPARATION (WELL POINTS), GRAVEL OR CEMENT STABILIZATION, OR APPROVED SUBSTITUTE) SHALL BE REQUIRED WHEN TRENCH BOTTOM IS UNSTABLE.

BACK FILLING AT STRUCTURES SHALL BE PLACED IN UNIFORM LAYERS, MOISTENED AS REQUIRED TO APPROXIMATE OPTIMUM MOISTURE CONTENTS AND COMPACTED TO 95% STANDARD PROCTOR DENSITY. THE THICKNESS OF EACH LOOSE LAYER SHALL BE SAND, APPROVED SITE SOIL OR OTHER APPROVED SUBSTITUTE.

STANDARD PIPE BEDDING (MAIN ONLY)

(PARALLEL WITHIN EXIST. STREET)

A. SAND BEDDING PLACED BEFORE PIPE IS LAID TO FLOW LINE OF PIPE (MIN. THICKNESS = 6")

B. SAND BACK FILL PLACED AFTER PIPE IS LAID FROM BOTTOM OF PIPE TO SPRING LINE OF PIPE. (4" LIFTS, MECH. TAMPED)

C. SAND BACK FILL PLACED FROM SPRING LINE OF PIPE TO 6" ABOVE TOP OF PIPE. (6" LIFTS, MECH. TAMPED)

D. FILL TRENCH WITH SELECT BACKFILL, WITH 12" LIFTS COMPACT TO 90% STD. PROCTOR.

FOUNDATION PREPARATION (WELL POINTS), GRAVEL OR CEMENT STABILIZATION, OR APPROVED SUBSTITUTE) SHALL BE REQUIRED WHEN TRENCH BOTTOM IS UNSTABLE.

BACK FILLING AT STRUCTURES SHALL BE PLACED IN UNIFORM LAYERS, MOISTENED AS REQUIRED TO APPROXIMATE OPTIMUM MOISTURE CONTENTS AND COMPACTED TO 95% STANDARD PROCTOR DENSITY. THE THICKNESS OF EACH LOOSE LAYER SHALL BE SAND, APPROVED SITE SOIL OR OTHER APPROVED SUBSTITUTE.

NOTE:

ALL EXISTING/ACTIVE STREET CROSSING SHALL REQUIRE SAND BACKFILL OF ENTIRE TRENCH. (SEE DETAIL S-6)

Dec 27, 2013 - 1:49PM

W-4	WATER STANDARD PIPE BEDDING DETAILS	THE CITY OF EDINBURG PUBLIC WORKS DEPARTMENT
	SCALE: N.T.S. / REVISED: JAG	
	DATE: FEBRUARY, 2010 / DRAWN BY: JAG	

THRUST BLOCK SIZE			
HORIZONTAL BENDS			
DIAMETER OF PIPE IN INCHES	SURFACE AREA SQ. FT.	THICKNESS IN INCHES	WEIGHT AT VERTICAL BENDS–LBS.
22–1/2° BENDS			
6 OR LESS	2	8	1,700
8	3	12	3,000
10	3.5	12	4,500
12	4	14	6,600
14	5	18	9,000
16	6	18	11,800
45° BEND			
6 OR LESS	4	12	3,200
8	5	14	5,800
10	6	18	9,000
12	7	18	13,000
14	8	24	17,000
16	11.5	24	23,200
90° BEND			
6 OR LESS	6	12	6,000
8	8	15	10,700
10	10	18	16,700
12	12	18	24,000
14	18	24	32,600
16	21	24	42,700
TEES & DEAD ENDS			
6 OR LESS	3	12	--
8	4	15	--
10	6	18	--
12	8.5	18	--
14	11.5	24	--
16	15	24	--

NOTE:

ALL VALUES SHOWN ARE MIN. FOR A HYDROSTATIC PRESSURE OF 150 PSI AND A SOIL RESISTANCE OF 2,000 LBS PER SQ. FT. WITH PIPELINE HAVING A MIN. OF 3 FT. OF COVER WITH CURB AND GUTTER AND A 5 FT. MIN. WITHOUT CURB AND GUTTER

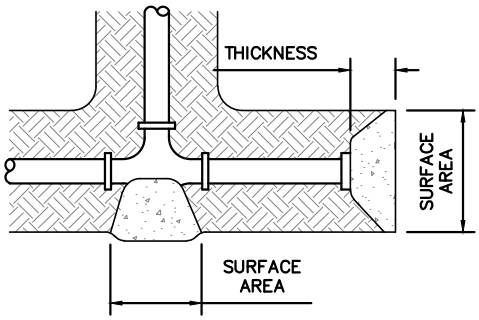

TEES & DEAD ENDS

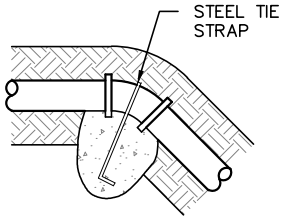

VERTICAL BENDS

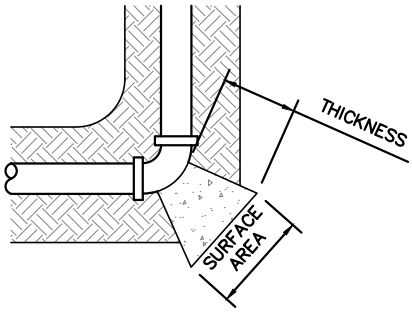

HORIZONTAL BENDS

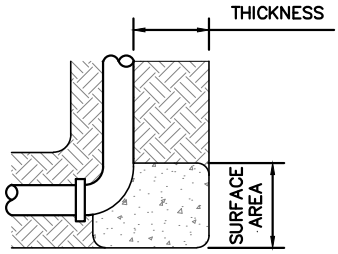

HYDRANT BURYS

THRUST BLOCKS DETAILS

NOTE: SEE THRUST BLOCK SIZE CHART FOR PROPER THICKNESS AND SURFACE AREAS

Dec 27, 2013 – 1:49PM

W-5

THRUST BLOCKS DETAILS

SCALE: N.T.S.	REVISED: IP
DATE: FEBRUARY, 2010	DRAWN BY:

THE CITY OF EDINBURG
PUBLIC WORKS DEPARTMENT

NOTES AS PER TEXAS DEPT. OF HEALTH MANUAL:

A. WATER LINE/NEW SEWER LINE SEPARATION.
WHEN NEW SANITARY SEWERS ARE INSTALLED, THEY SHALL BE INSTALLED NO CLOSER TO WATERLINE THAN NINE FEET IN ALL DIRECTIONS, SEWERS THAT PARALLEL WATERLINES MUST INSTALLED IN SEPARATE TRENCHES, WHERE THE NINE FOOT SEPARATION DISTANCE CANNOT BE ACHIEVED, THE FOLLOWING GUIDELINES WILL APPLY

1. WHERE A SANITARY SEWER PARALLELS A WATERLINES, THE SEWER SHALL BE CONSTRUCTED OF CAST IRON, DUCTILE IRON OR PVC. MEETING ASTM SPECIFICATIONS WITH A PRESSURE RATING FOR BOTH THE PIPE AND JOINTS OF 150 PSI. THE VERTICAL SEPARATION SHALL BE MINIMUM OF TWO FEET BETWEEN OUTSIDE DIAMETERS AND HORIZONTAL SEPARATION SHALL BE A MINIMUM OF FOUR FEET BETWEEN OUTSIDE DIAMETER. THE SEWER SHALL BE LOCATE BELOW THE WATERLINE.

2. WHERE A SANITARY SEWER CROSSES A WATERLINE AND THE SEWER IS CONSTRUCTED OF CAST IRON, DUCTILE IRON OF PVC WITH A MINIMUM PRESSURE RATING OF 150 PSI, AN ABSOLUTE MINIMUM DISTANCE OF 6 INCHES BETWEEN OUTSIDE DIAMETER SHALL BE MAINTAINED, IN ADDITION THE SEWER SHALL BE LOCATED BELOW THE WATERLINE WHERE POSSIBLE AND ONE LENGTH OF THE SEWER PIPE MUST BE CENTERED ON THE WATERLINE.

3. WHERE A SEWER CROSSES UNDER A WATERLINE AND THE SEWER IS CONSTRUCTED OF ABS TRUSS PIPE, SIMILAR SEMI-RIGID PLASTIC COMPOSITE PIPE, CLAY PIPE OR CONCRETE PIE WITH GASKETS JOINTS, A MINIMUM TWO FEET SEPARATION DISTANCE SHALL BE MAINTAINED. THE INITIAL BACKFILL SHALL BE CEMENT STABILIZED SAND (TWO OR MORE BAGS OF CEMENT PER CUBIC YARD OF SAND) THE INITIAL BACKFIELD SHALL BE CEMENT STABILIZED SAND (TWO OF MORE BAGS OF CEMENT). FOR ALL SECTIONS OF SEWER WITHIN NINE FEET OF WATERLINE. THE INITIAL BACK FILL BE FROM ONE QUARTER DIAMETER.

4. WHERE A SEWER CROSSES OVER A WATERLINE ALL PORTIONS OF THE SEWER WITHIN NINE FEET OF THE WATERLINE SHALL BE CONSTRUCTED OF CAST IRON, DUCTILE IRON, OR PVC PIPE WITH A PRESSURE RATING OF A LEAST 150 PSI USING APPROPRIATE ADAPTERS, IN LIEU OF THIS PROCEDURE THE NEW CONVEYANCE MAY BE ENCASED IN A JOINT OF 150 PSI PRESSURE CLASS PIPE AT LEAST 18 FEET LONG AND TWO NOMINAL SIZES LARGER THAN THE NEW CONVEYANCE. THE SPACE AROUND THE CARRIER PIPE SHALL BE SUPPORTED AT 5 FEET INTERVALS WITH SPACERS OF THE FILLED TO THE SPRING-LINE WITH WASHED SAND. THE ENCASEMENT PIPE SHOULD BE CENTERED ON THE CROSSING AND BOTH ENDS SEALED WITH CEMENT GROUT OR MANUFACTURED SEAL.

B. WATER LINE/MANHOLE SEPARATION:
UNLESS SANITARY SEWER MANHOLES AND THE CONNECTING SEWER CAN BE MADE WATERTIGHT AND TESTED FOR LEAKAGE, THEY MUST BE INSTALLED SO AS TO PROVIDE A MINIMUM OF NINE FEET OF HORIZONTAL CLEARANCE FROM AN EXISTING OR PROPOSED WATERLINE, WHERE THE NINE FOOT SEPARATION DISTANCE CANNOT BE ACHIEVED, A CARRIER PIPE AS DESCRIBED IN SUBSECTION A-4 OF THIS SECTION MAY BE USED WHERE APPROPRIATE.

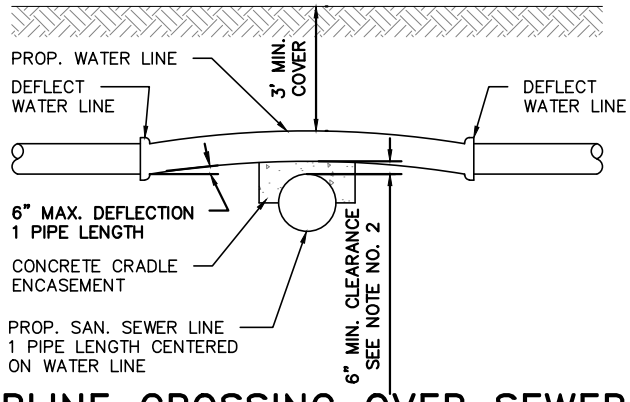

WATERLINE CROSSING OVER SEWER LINE

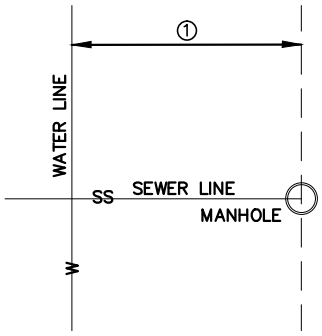

PLAN

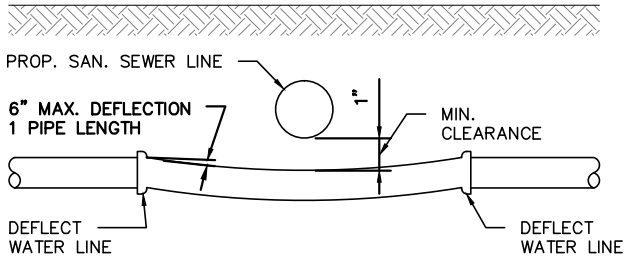

WATERLINE CROSSING UNDER SEWER LINE

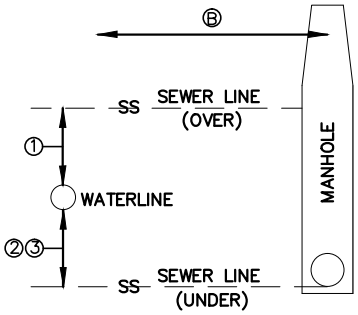

PROFILE

W-6	WATER/SANITARY SEWER CROSSING DETAILS	THE CITY OF EDINBURG PUBLIC WORKS DEPARTMENT
	SCALE: N.T.S.	REVISED: JAG
	DATE: FEBRUARY, 2010	DRAWN BY: JAG

Dec 27, 2013 – 1:50PM

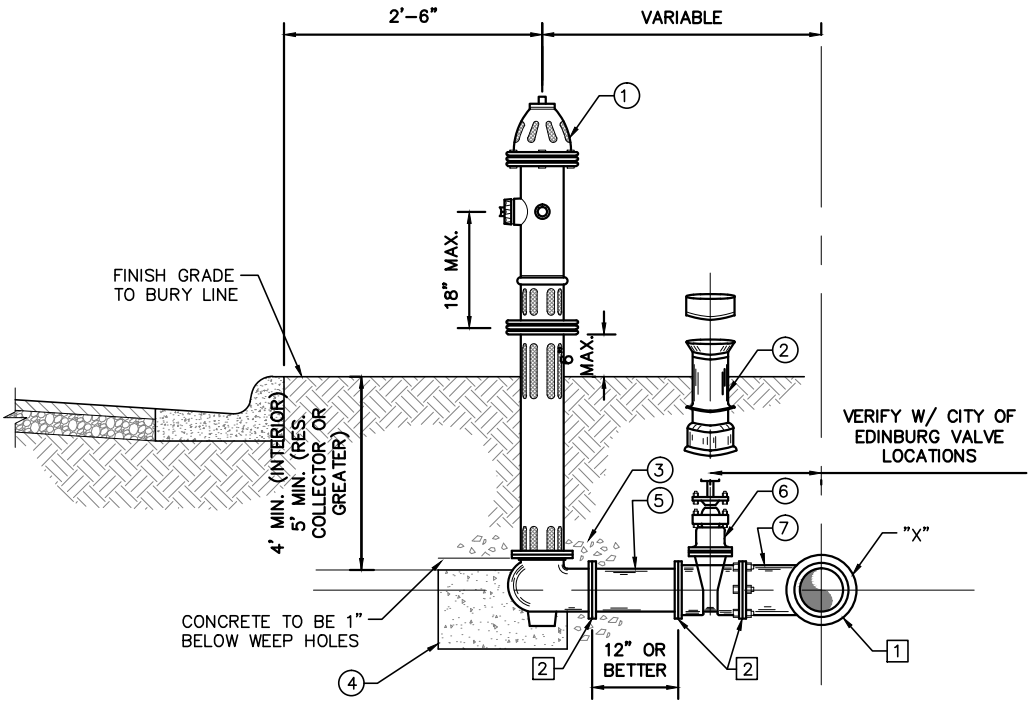

STANDARD FIRE HYDRANT INSTALLATION

MULLER(SUPER CENTURION 250 A-423) OR
AMERICAN DARLING B-84-B (SEE NOTE 4) ONLY

NOTE: FIRE HYDRANT TO BE PAINTED RED.

NOTE:

1. OIL SHALL BE PLACED IN HYDRANT AT THE TIME OF INSTALLATION
2. PUMPER NOZZLE SHALL FACE ROADWAY. (5½" N.S.T.)
3. IN CERTAIN INSTANCES, WHERE DISTANCES PERMITS, A PARALLEL TEE OR UNION-TITE 90° ELBOW WITH RESTRAINING LUGS MAY BE USED IN LIEU OF STANDARD TEE. FINAL APPROVAL BUY THE CITY OF EDINBURG.
4. IF AMERICAN DARLING IS USED MODEL B-84-B WITH EPOXY COAT VALVE PLATE AND INTERIOR SHOE.
5. TAPPING SLEEVES TO HAVE STAINLESS STEEL BOLTS AND NUTS
6. ALL VALVES, FITTINGS AND HYDRANTS AND ACCESSORIES TO BE GREASED WRAPPED IN PLASTIC.
7. ALL VALVES, FITTINGS AND ACCESSORIES, VALVE BOXES METER BOXES AND COVERS MUST ME APPROVED BY THE CITY OF EDINBURG.

FIRE HYDRANT INSTALLATION
CONSIST OF FIRE HYDRANT, VALVE
AND VALVE BOX

FIRE HYDRANT UNIT SHALL INCLUDE:

(1) FIRE HYDRANT WITH (4½" PUMPER NOZZLE)

(2) VALVE BOX (DOMESTIC)

(3) 3 CU. FT. GRAVEL

(4) 3 CU. FT. CONCRETE 1" BELOW HYDRANT WEEPHOLES

(5) 1" OR BETTER PVC SPOOLS

(6) 6" RESILIENT SEAT GATE VALVE (FLANGED X M.J.)

(7) X"x6" CAST IRON TEE (FLANGED X M.J.) "X" WATER MAIN DIA.

[1] MECHANICAL JOINT

[2] FLANGE

W-7	FIRE HYDRANT INSTALLATION DETAILS		THE CITY OF EDINBURG PUBLIC WORKS DEPARTMENT
	SCALE: N.T.S.	REVISED: JAG	
	DATE: FEBRUARY, 2010	DRAWN BY: JAG	

Dec 27, 2013 - 1:50PM

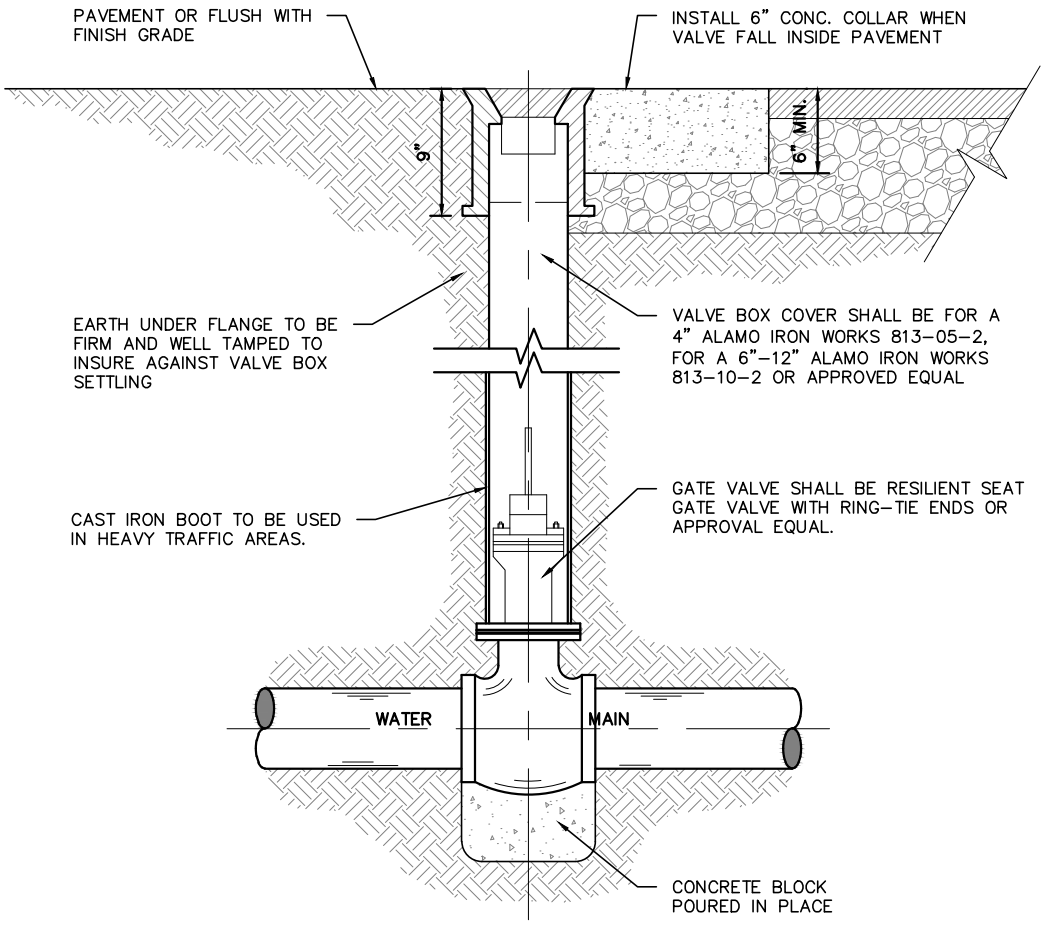

TYPICAL VALVE AND VALVE BOX INSTALLATION ON MAIN LINE

MUELLER (A-2360 SERIES) OR AMERICAN FLOW CONTROL (AFC-2500) ONLY

NOTE: ALL FITTINGS TO BE GREASED AND WRAPPED IN PLASTIC.

Dec 27, 2013 – 1:51PM

W-8	VALVE AND VALVE BOX DETAILS	THE CITY OF EDINBURG PUBLIC WORKS DEPARTMENT
	SCALE: N.T.S.	REVISED: IP
	DATE: FEBRUARY, 2010	DRAWN BY: RMM

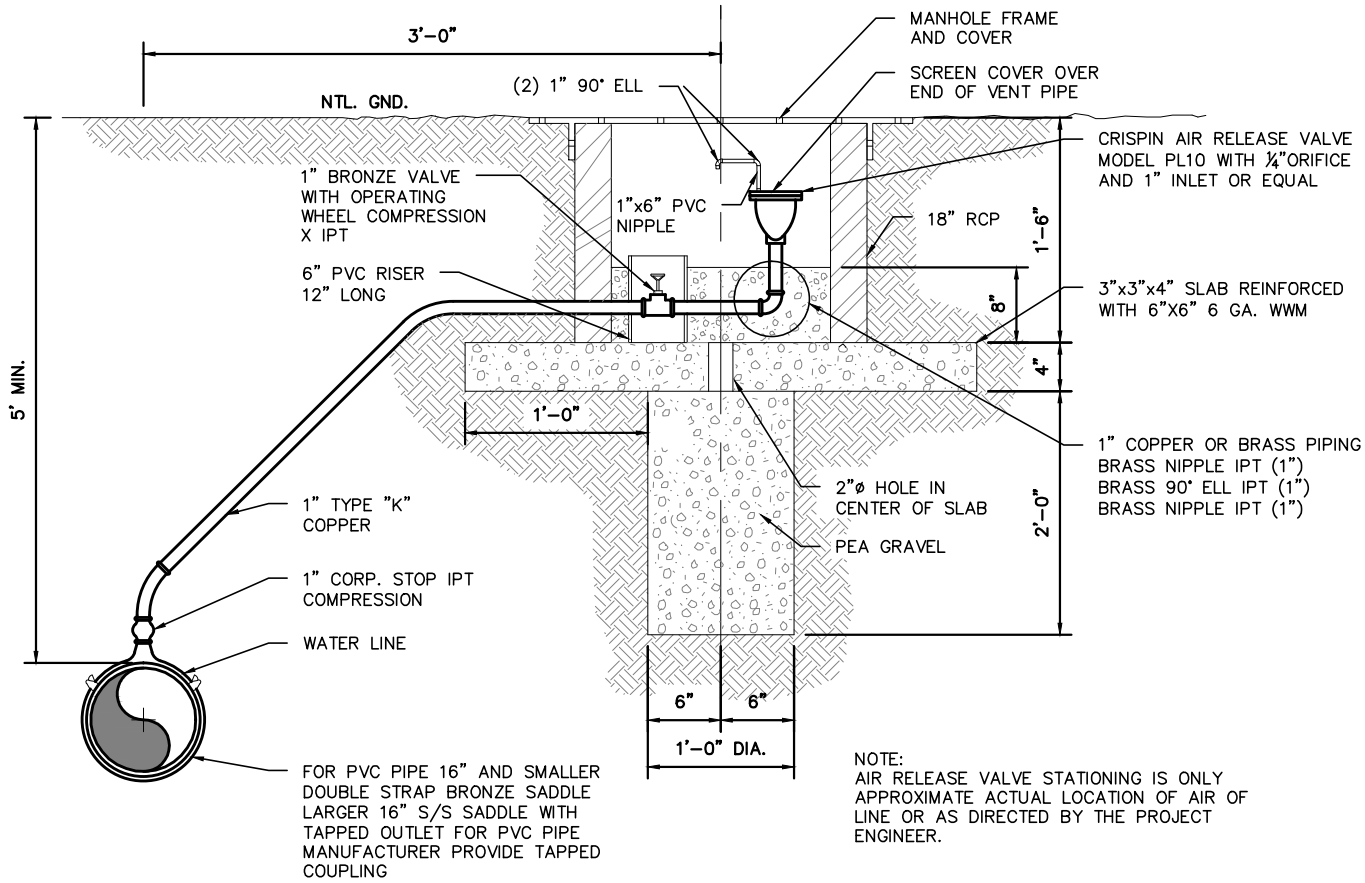

NOTE:
AIR RELEASE VALVE STATIONING IS ONLY APPROXIMATE ACTUAL LOCATION OF AIR OF LINE OR AS DIRECTED BY THE PROJECT ENGINEER.

TYPICAL AIR RELEASE VALVE INSTALLATION DETAIL

W-9

TYPICAL AIR RELEASE VALVE INSTALLATION DETAIL

SCALE: N.T.S.	REVISED: I.P.
DATE: FEBRUARY, 2010	DRAWN BY:

THE CITY OF EDINBURG
PUBLIC WORKS DEPARTMENT

Dec 27, 2013 - 1:51PM

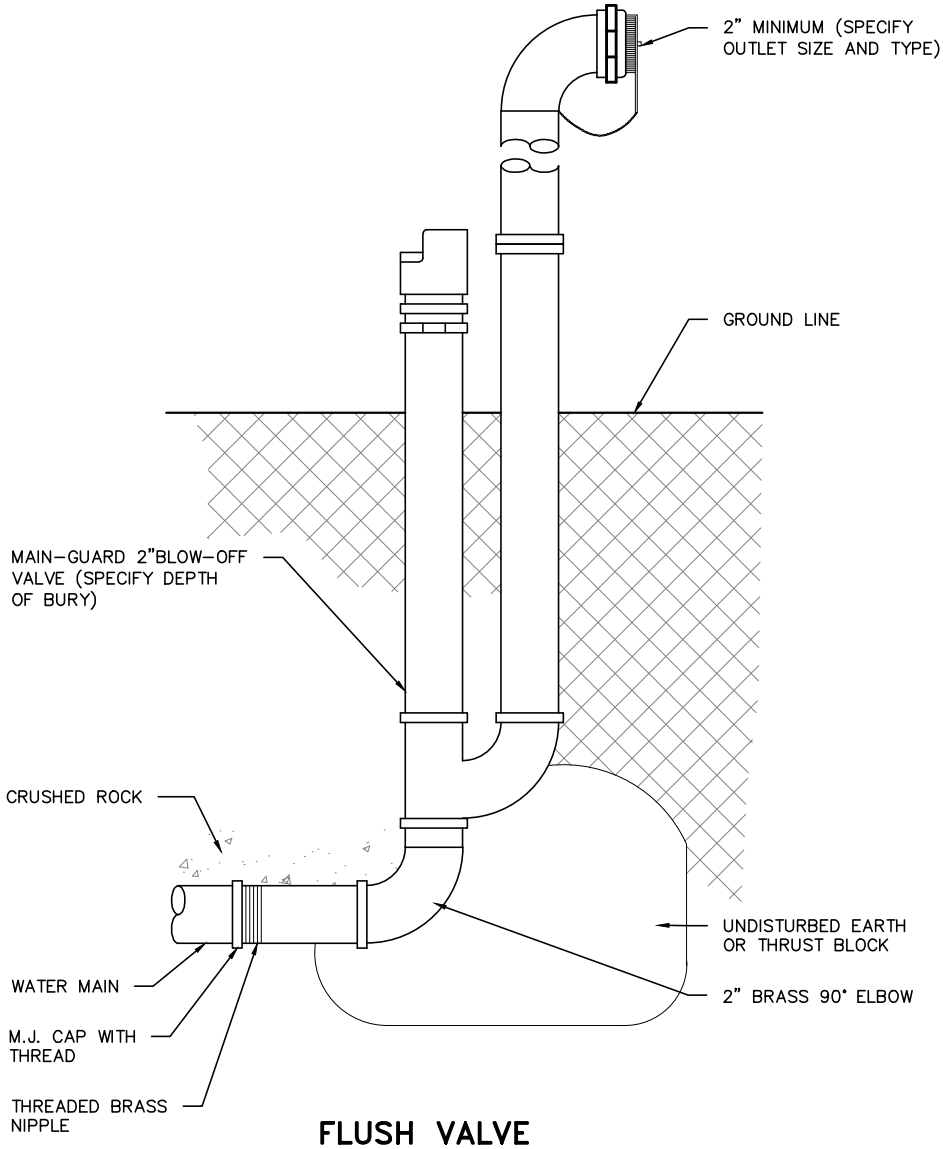

FLUSH VALVE

POST HYDRANT SHALL BE NON-FREEZING, SELF DRAINING TYPE WITH A 5' MIN. DEPTH OF BURY. THESE FLUSH VALVES WILL BE FURNISHED WITH A 2" FIP INLET, A NON-TURNING OPERATING ROD AND SHALL OPEN TO THE LEFT. ALL WORKING PARTS SHALL BE BRONZE TO BRONZE DESIGN AND BE SERVICEABLE FROM ABOVE GRADE WITH NO DIGGING. THE OUTLET SHALL ALSO BE BRONZE AND DIGGING, THE OUTLET SHALL ALSO BE BRONZE AND BE 1 ½" NST. FLUSH VALVES SHALL BE LOCKABLE TO PREVENT UNAUTHORIZED USE AS MANUFACTURED BY KUPFERLE FOUNDRY CO. ST. LOUIS, MO. OR APPROVED EQUAL.

W-10	FLUSH VALVE DETAILS	THE CITY OF EDINBURG PUBLIC WORKS DEPARTMENT
	SCALE: N.T.S.	REVISED: I.P.
	DATE: FEBRUARY, 2010	DRAWN BY: RMM

Dec 27, 2013 – 1:52PM

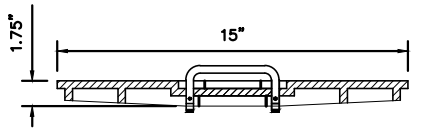

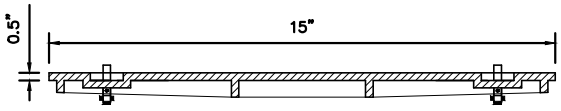

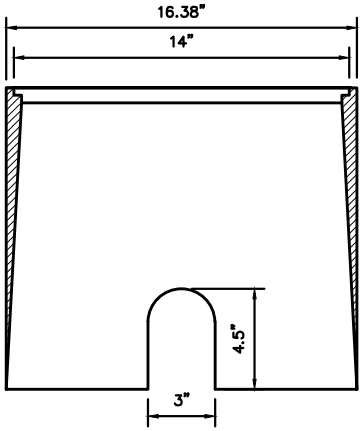

SECTION A–A

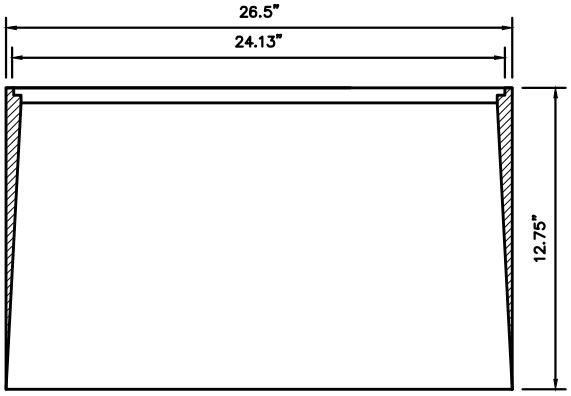

SECTION B–B

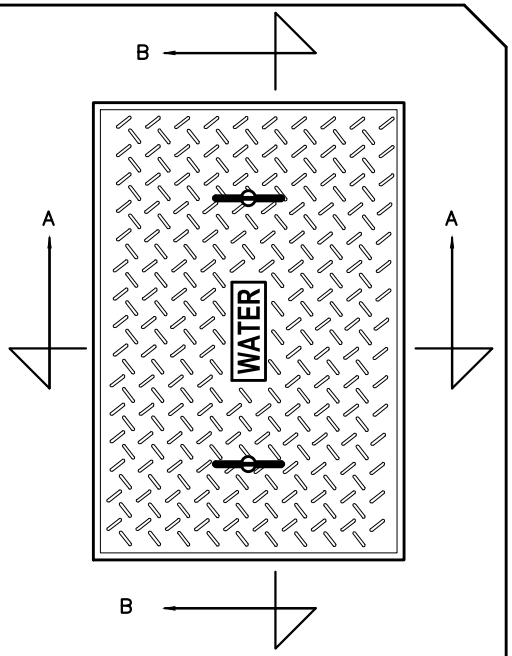

TOP VIEW

CAST IRON METER

NOTES:

A. MATERIAL – CAST IRON PER ASTM A48 CLASS 30B

B. LIFT HANDLE – $\frac{3}{8}$" DIA. STEEL STANDARD.

C. DIMENSIONS IN INCHES.

Feb. 14, 2014 – 11:11AM

W-11

COMMERCIAL CAST IRON
METER COVER DETAIL

SCALE: N.T.S.	REVISED: TR
DATE: FEBRUARY, 2014	DRAWN BY: RMM

THE CITY OF EDINBURG
PUBLIC WORKS DEPARTMENT

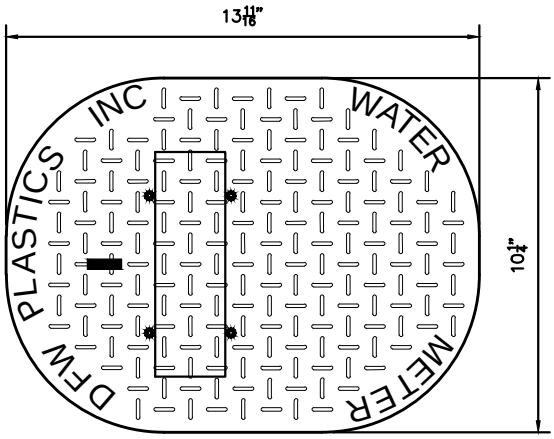

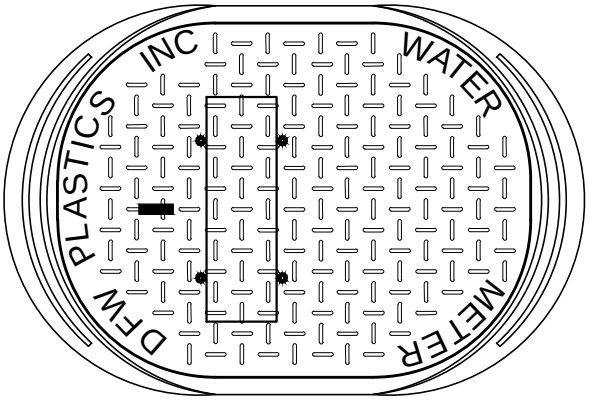

DFW1017-10-1A

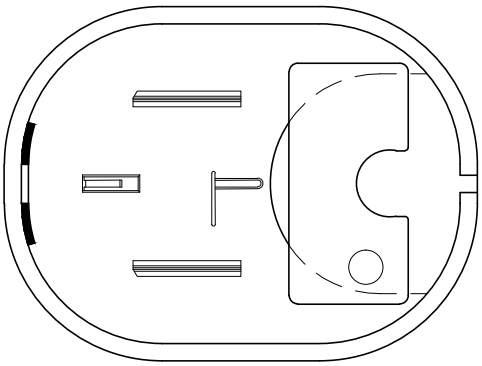

DFW1017-1A-LID

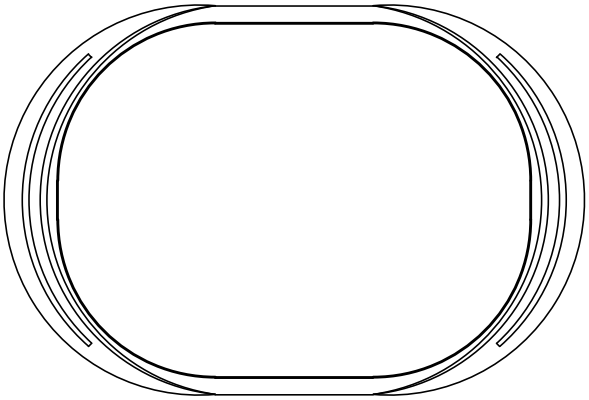

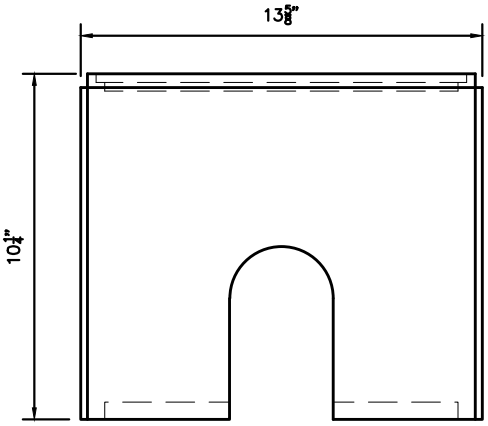

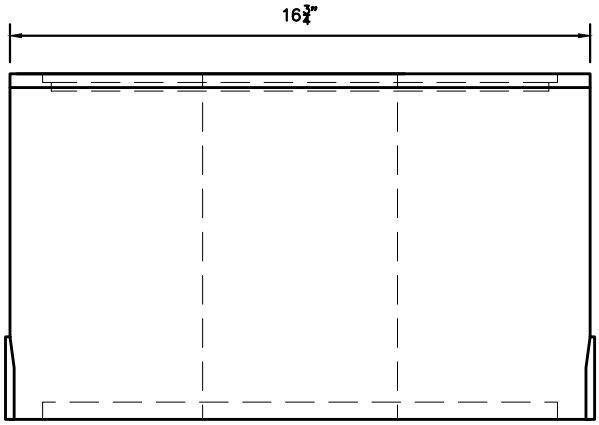

DFW1017-10-BODY

NOTES:
1. DIM'S +/-$\frac{1}{8}$ U.N.O.
2. SNAP LOCK POCKET WILL RECEIVE

Feb 10, 2014 – 10:14AM

W-12

RESIDENTIAL OVAL PLASTIC METER COVER – DETAILS

SCALE: N.T.S.	REVISED:
DATE: JANUARY, 2014	DRAWN BY: RMM

THE CITY OF EDINBURG
PUBLIC WORKS DEPARTMENT

CONSTRUCTION NOTES:

1. ALL CONCRETE TO HAVE A MINIMUM OF 28 DAYS COMPRESSIVE STRENGHT OF 3,000 P.S.I.

CONSTRUCTION NOTES:

A. WATER MAIN (SEE PLANS AND SPECIFICATIONS).

B. TAPPING SLEEVE (SIZE AS REQUIRED).

C. CONCRETE SUPPORT UNDER TAPPING SLEEVE AND BEHIND.

D. THRUST BLOCK AS PER SPECIFICATIONS.

E. FLANGED AND HUB ENDS "O" RING SEALS WITH 2" SQUARE WRENCH NUT GATE VALVE.

F. ANCHOR RODS

G. PVC PIPE

H. SIMPLEX COUPLING

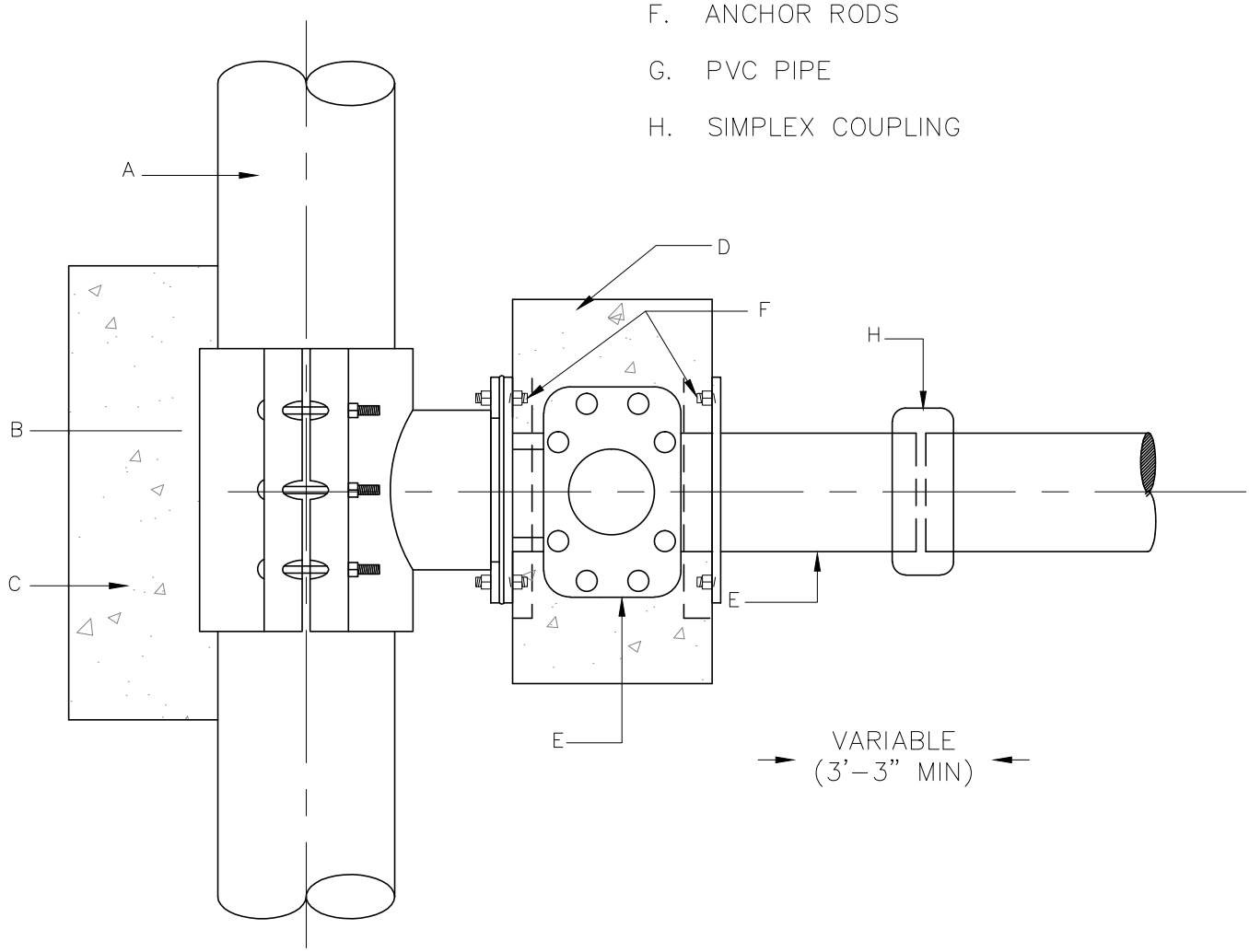

W-13

WATER TAPPING SLEEVE AND VALVE INSTALLATION ON LARGER PIPE

SCALE: N.T.S.	REVISED: AB
DATE: JANUARY, 2014	DRAWN BY: JAS

THE CITY OF EDINBURG
PUBLIC WORKS DEPARTMENT

Jan 15, 2014 – 9:41AM

CONSTRUCTION NOTES

1. ALL CONCRETE TO HAVE A MINIMUM OF 28 DAYS COMPRESSIVE STRENGTH OF 3,000 PSI

CONSTRUCTION NOTES

A. WATER MAIN (SEE PLANS AND SPECIFICATIONS).

B. TAPPING SLEEVE (SIZE AS REQUIRED).

C. CONCRETE SUPPORT UNDER TAPPING SLEEVE AND BEHIND.

D. THRUST BLOCK AS PER
E. SPECIFICATIONS.

F. FLANGED AND HUB ENDS "O" RING SEALS WITH 2" SQUARE WRENCH NUT GATE VALVE.

G. ANCHOR RODS

H. PVC PIPE

I. SIMPLEX COUPLING

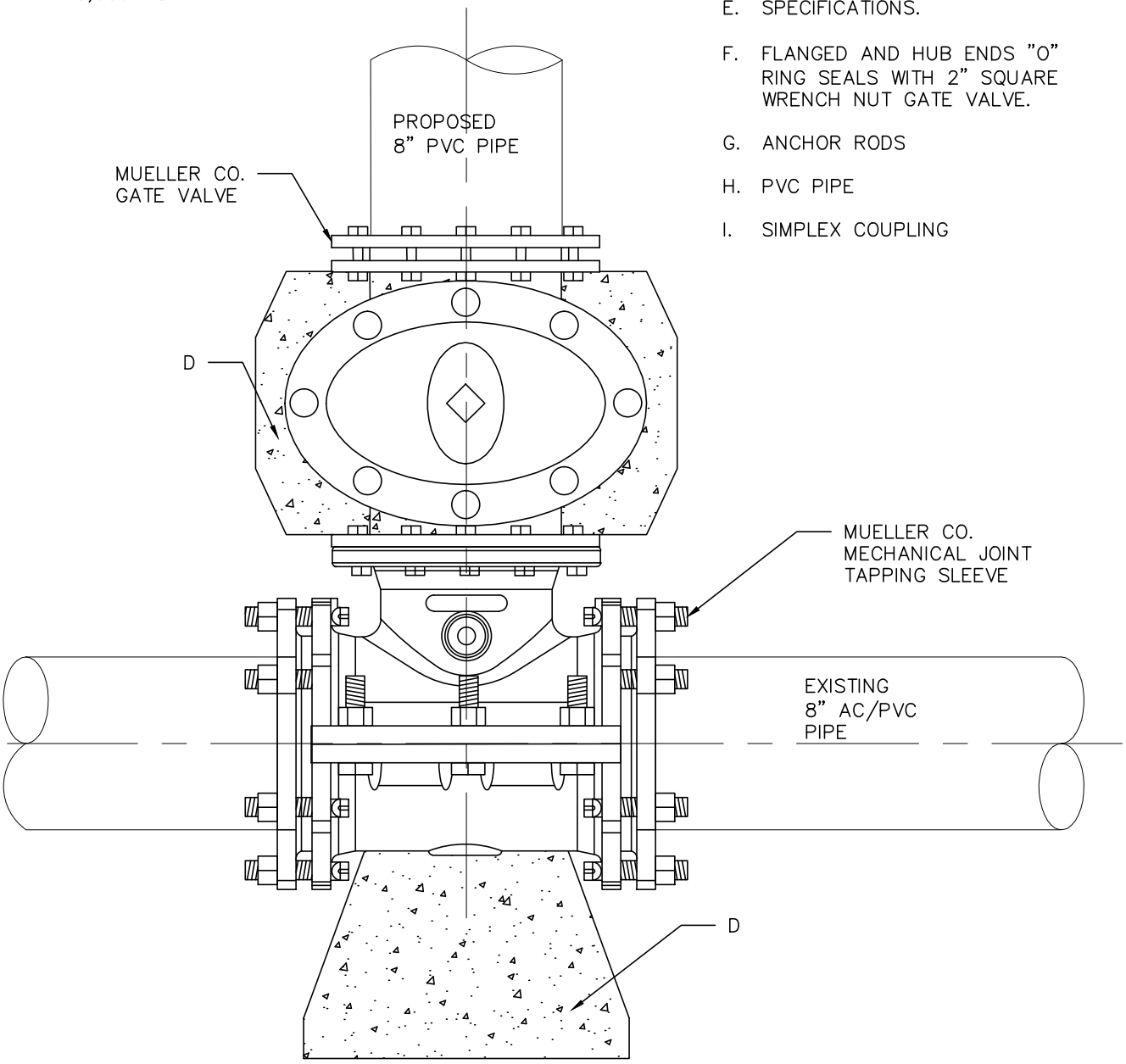

W-14

SAME SIZE WATER TAPPING SLEEVE AND VALVE INSTALLATION

SCALE: N.T.S.	REVISED: AB
DATE: JANUARY, 2014	DRAWN BY: JAS

THE CITY OF EDINBURG
PUBLIC WORKS DEPARTMENT

Jan 15, 2014 – 9:41AM

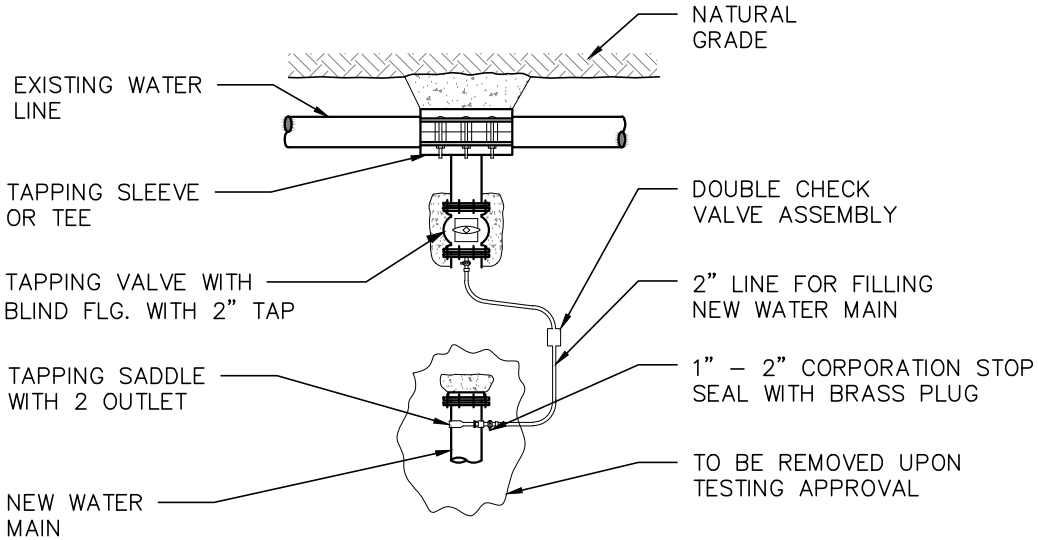

METHOD FOR FILLING NEW WATER LINES PRIOR TO CHLORINATION AND TESTING

NOTES:

1. THIS METHOD SHALL ALSO BE USED AT A NEW CONNECTION TO AN EXISTING DEAD END LINE.
2. AFTER THE NEW LINE HAS BEEN DISINFECTED AND PRESSURIZED. THE VALVE AT THE CONNECTION TO THE EXISTING LINE SHALL BE OPENED (BY CITY OF EDINBURG) TO FLUSH OUT THE SUPER CHLORINE.
3. 2" TAP DEE NEED TO BE PAID BY DEVELOPER, CONTRACTOR OR CUSTOMER.

Jan 15, 2014 – 9:42AM

W-15

METHOD FOR FILLING NEW WATER LINES PRIOR TO CHLORINATION AND TESTING

SCALE: N.T.S.	REVISED: AB
DATE: JANUARY, 2014	DRAWN BY: JAS

THE CITY OF EDINBURG
PUBLIC WORKS DEPARTMENT

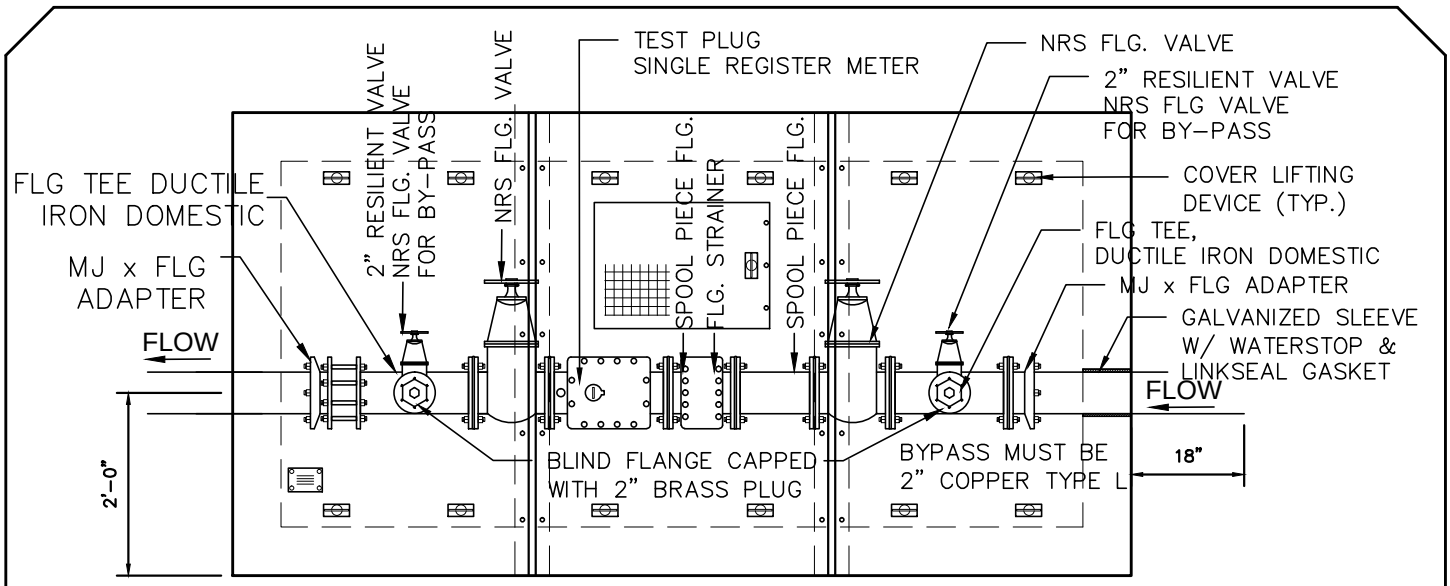

PLAN VIEW

RAISED PLATE SECTIONAL STEEL COVER WITH 24"x24" HINGED MANWAY HOT DIPPED GALVANIZED AFTER FABR. PER CITY OF EDINBURG SPECIFICATIONS.

MODEL	SIZE	BY PASS	L1	W1	H1	WEIGHT LBS
DMCCOH3	3"	2"	11'-6"	6'-0"	4'-3"	14,500
DMCCOH4	4"	2"	11'-6"	6'-0"	4'-3"	15,000
DMCCOH6	6"	4"	13'-6"	6'-0"	4'-3"	15,500

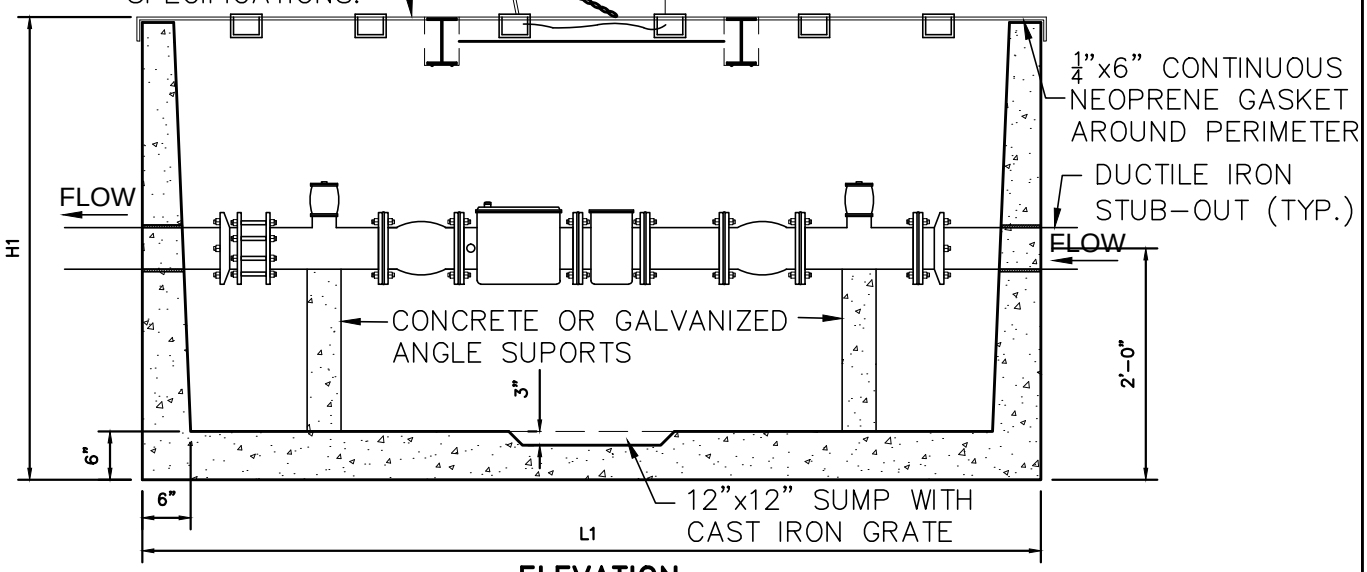

ELEVATION

SPECIFICATIONS:

CONCRETE: Class 1 concrete with design strength of 4500 PSI at 28 days. Unit of monolithic construction at floor and first stage of wall with sectional riser to required depth.

REINFORCEMENT: Grade 60 reinforced. Steel rebar conforming to ASTM A615 on required centers or equal.

STEEL COVER: All steel fabrication shall be in accordance to AWA D1.1. Steel shall be ASTM A36 carbon steel, and hot dipped galvanized after fabrication in accordance to ASTM A 123. Standard cover is rated for 50 PSF.

ENGINEERING DATA: The meter assembly shall be factory assembled in vault & hydrostatically tested prior to delivery. Field excavation & preparation shall be complete prior to delivery. Pipe, valves and fittings of the assembly shall be approved by one or more of the following associations: American Water Works Association, Underwriters Laboratories, Uniform Plumbing Code, American Sociatey of Sanitary Engineering.

Jan 13, 2014 – 11:15AM

W-16

METER VAULT

DETAILS

SCALE: N.T.S.	REVISED:
DATE: JANUARY, 2014	DRAWN BY: RMM

THE CITY OF EDINBURG

PUBLIC WORKS DEPARTMENT

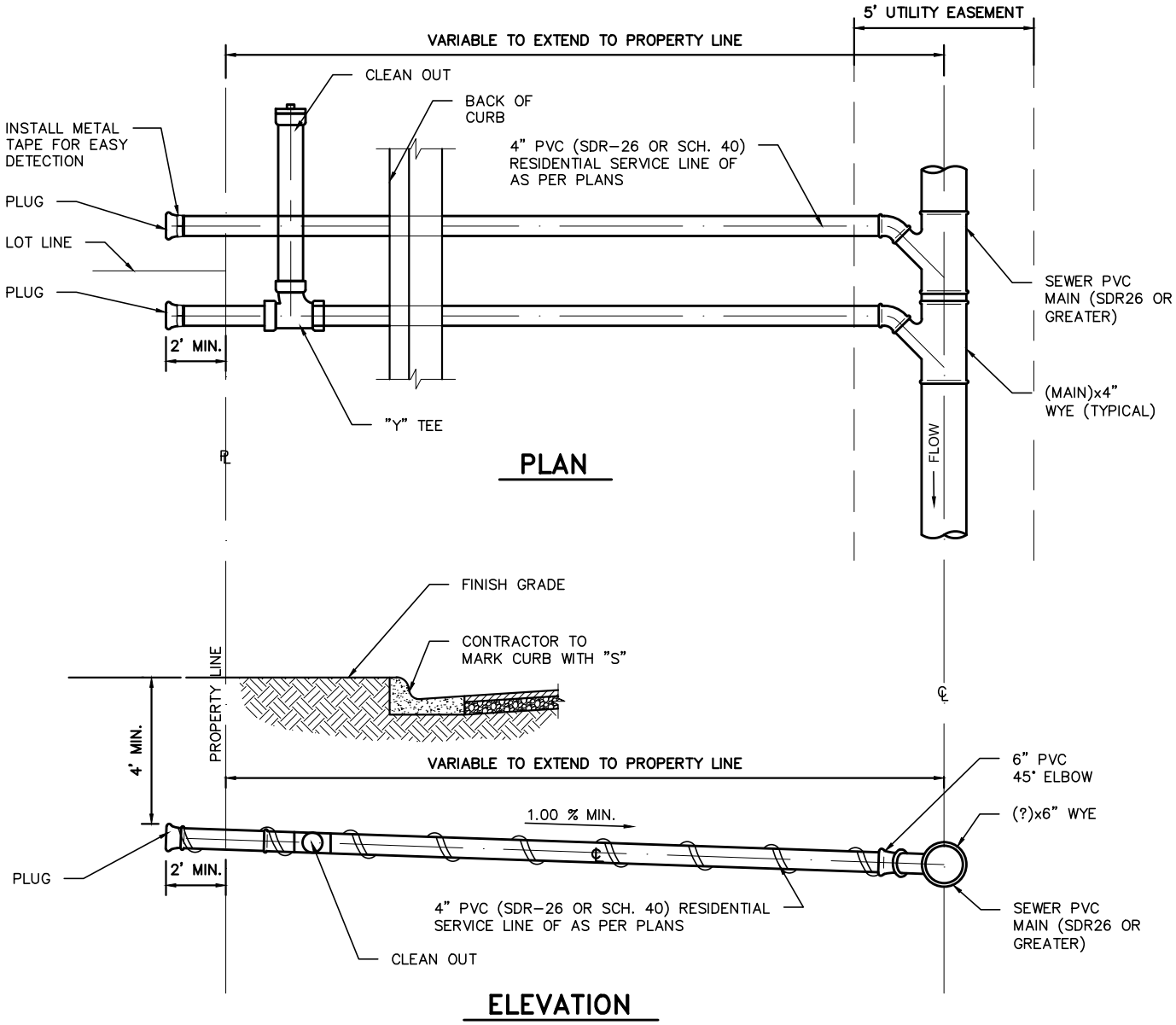

TYPICAL RESIDENTIAL SEWER SERVICE LINE INSTALLATION

(RESIDENTIAL AND DUPLEX ONLY)

NOTE: SEE DETAIL S-5 FOR BACKFILL REQUIREMENTS.

S-1	RESIDENTIAL SAN. SEWER SERVICE DETAILS	THE CITY OF EDINBURG PUBLIC WORKS DEPARTMENT
	SCALE: N.T.S. / REVISED: PNL	
	DATE: FEBRUARY, 2014 / DRAWN BY: RMM	

Apr 10, 2014 - 9:21AM

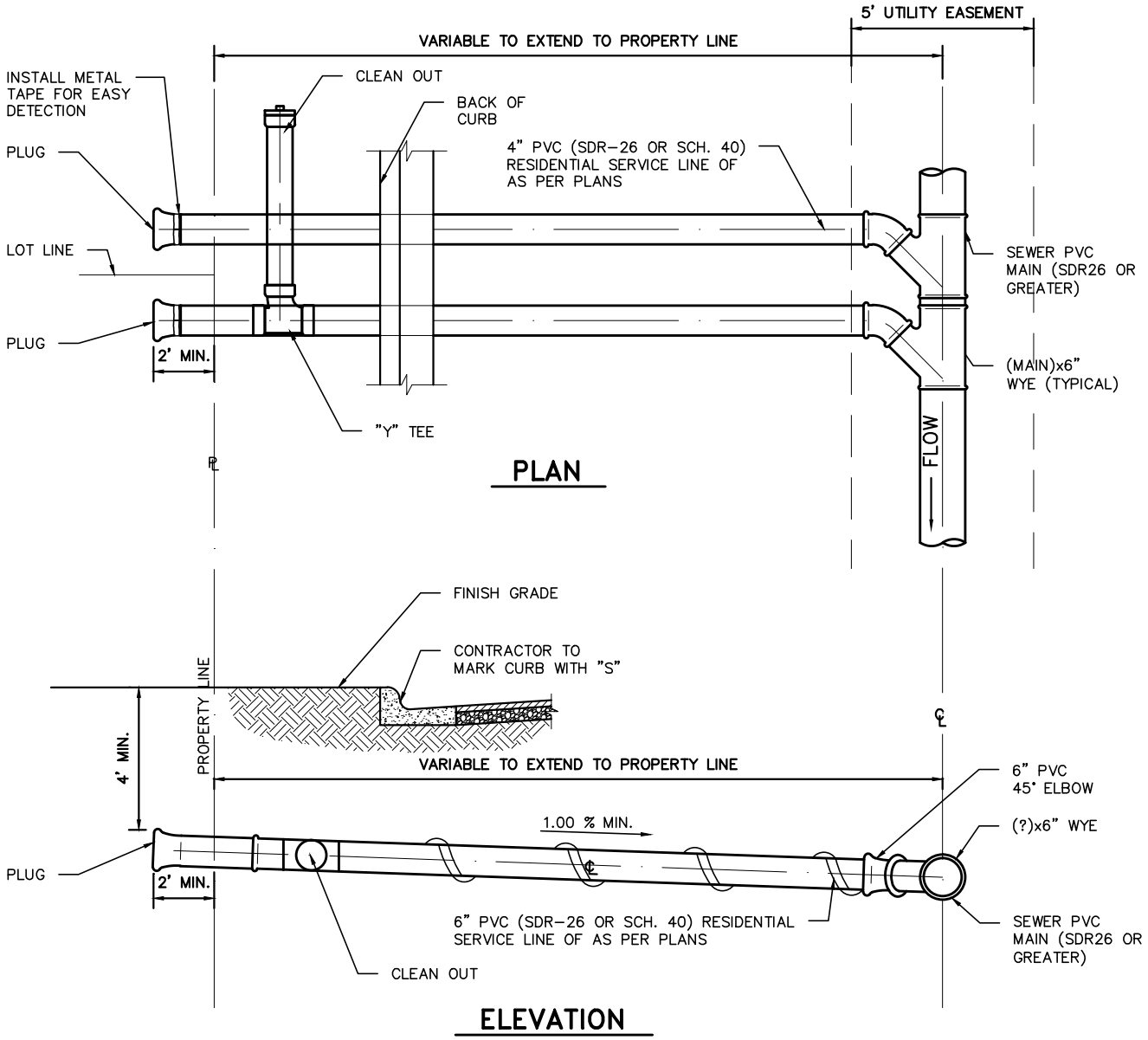

TYPICAL MULTIFAMILY AND COMMERCIAL SEWER SERVICE LINE INSTALLATION

(MULTIFAMILY UP TO TRIPLEX)

NOTE: SEE DETAIL S-5 FOR BACKFILL REQUIREMENTS.

S-2	MULTIFAMILY AND COMMERCIAL SAN SEWER SERVICE DETAILS	THE CITY OF EDINBURG PUBLIC WORKS DEPARTMENT
	SCALE: N.T.S. / REVISED: PNL	
	DATE: FEBRUARY, 2014 / DRAWN BY: RMM	

Apr 10, 2014 - 9:21AM

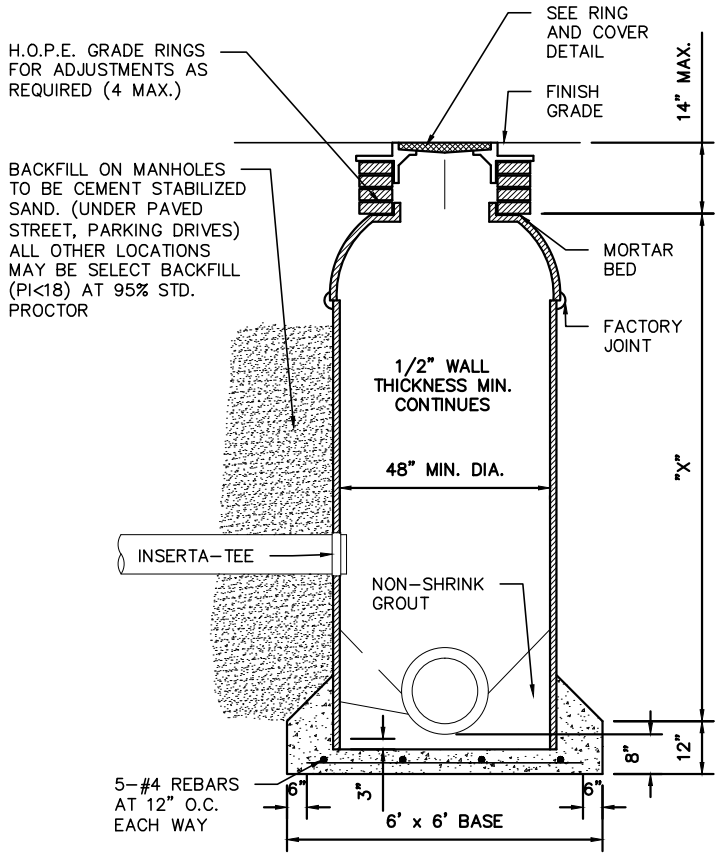

TYPICAL FIBERGLASS MANHOLE

NOTE: ALL DROP CONNECTIONS TO M.H. SHALL USE INSERTA-TEE

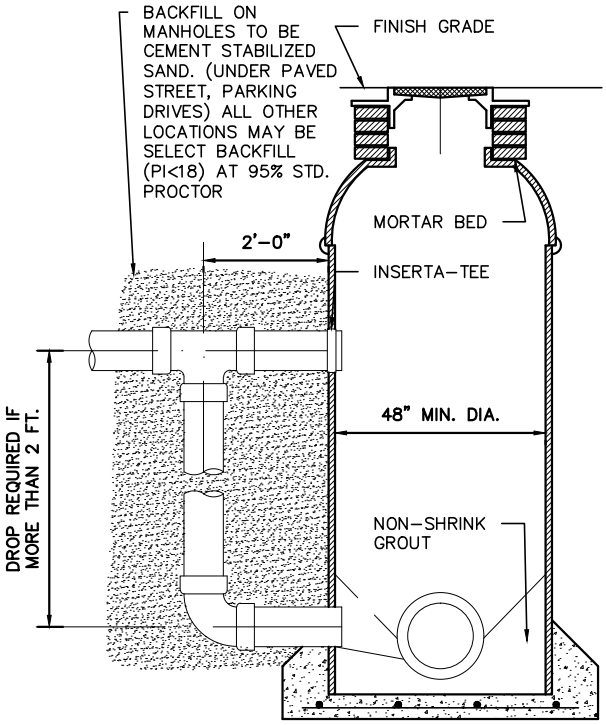

TYPICAL FIBERGLASS MANHOLE
With DROP STRUCTURE

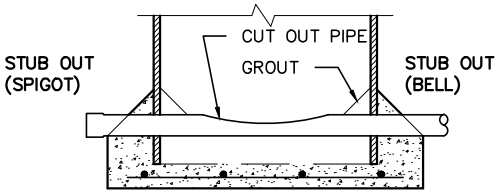

SECT. VIEW A-A

1. CUT PIPE TP LENGTH 7' FOR 4' M.H.
2. LAY PIPE
3. EXCAVATE UNDER PIPE FOR M.H. BASE MIN. 6"
4. PLACE REBAR MAT
5. PLACE CONCRETE
6. IMMEDIATELY PLACE FIBERGLASS M.H.
7. GROUT INSIDE WALLS OF M.H. AROUND PIPE
8. CUT OUT PIPE
9. NO PRE-CAST BASES PERMITTED

S-3	FIBERGLASS MANHOLE DETAILS		THE CITY OF EDINBURG PUBLIC WORKS DEPARTMENT
	SCALE: N.T.S.	REVISED: JAG	
	DATE: FEBRUARY, 2010	DRAWN BY: RMM	

Dec 27, 2013 - 3:01PM

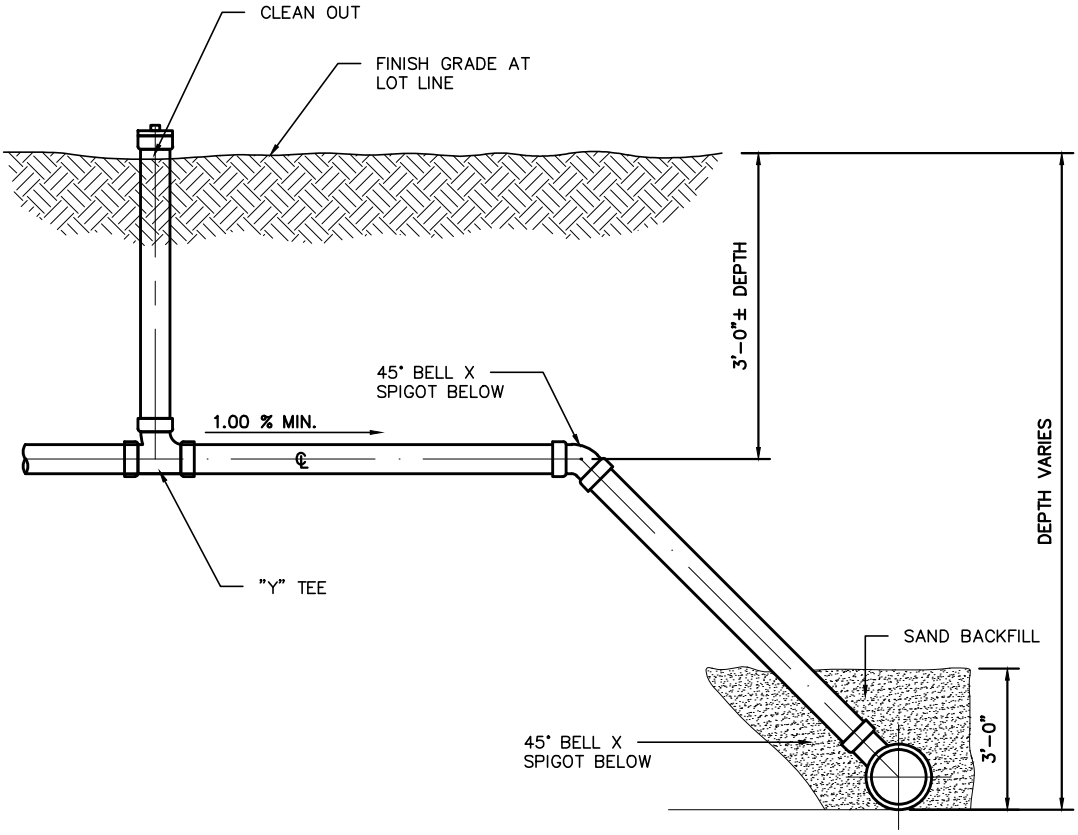

TYPICAL SHALLOW SERVICE CONNECTION

S-4	SHALLOW SERVICE CONNECTION DETAIL	THE CITY OF EDINBURG PUBLIC WORKS DEPARTMENT
	SCALE: N.T.S.	REVISED: IP/JAG
	DATE: FEBRUARY, 2014	DRAWN BY: RMM

Apr 10, 2014 – 1:28PM

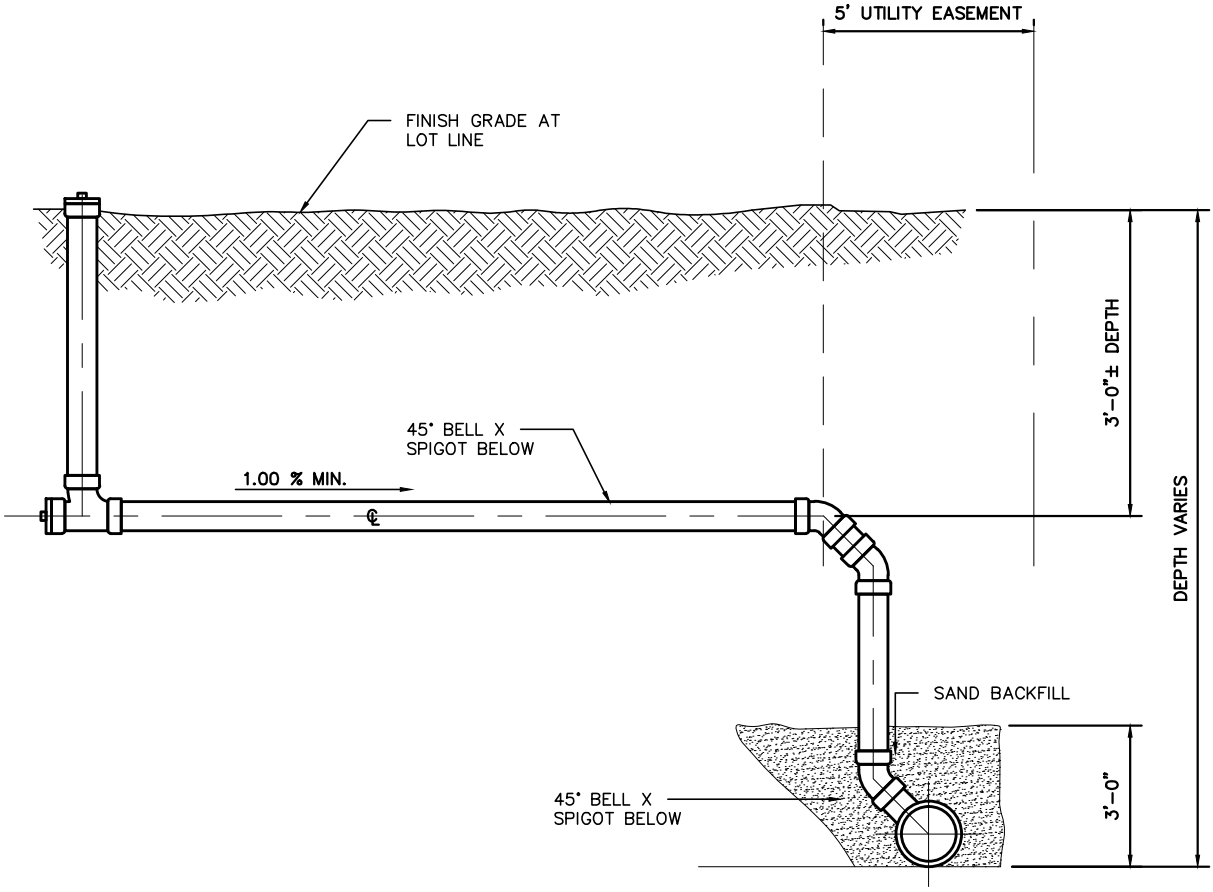

TYPICAL DEEP SERVICE CONNECTION

S-5	DEEP SERVICE CONNECTION DETAIL	THE CITY OF EDINBURG PUBLIC WORKS DEPARTMENT
	SCALE: N.T.S.	REVISED: AB
	DATE: DECEMBER, 2013	DRAWN BY: JAS

Dec 27, 2013 – 3:02PM

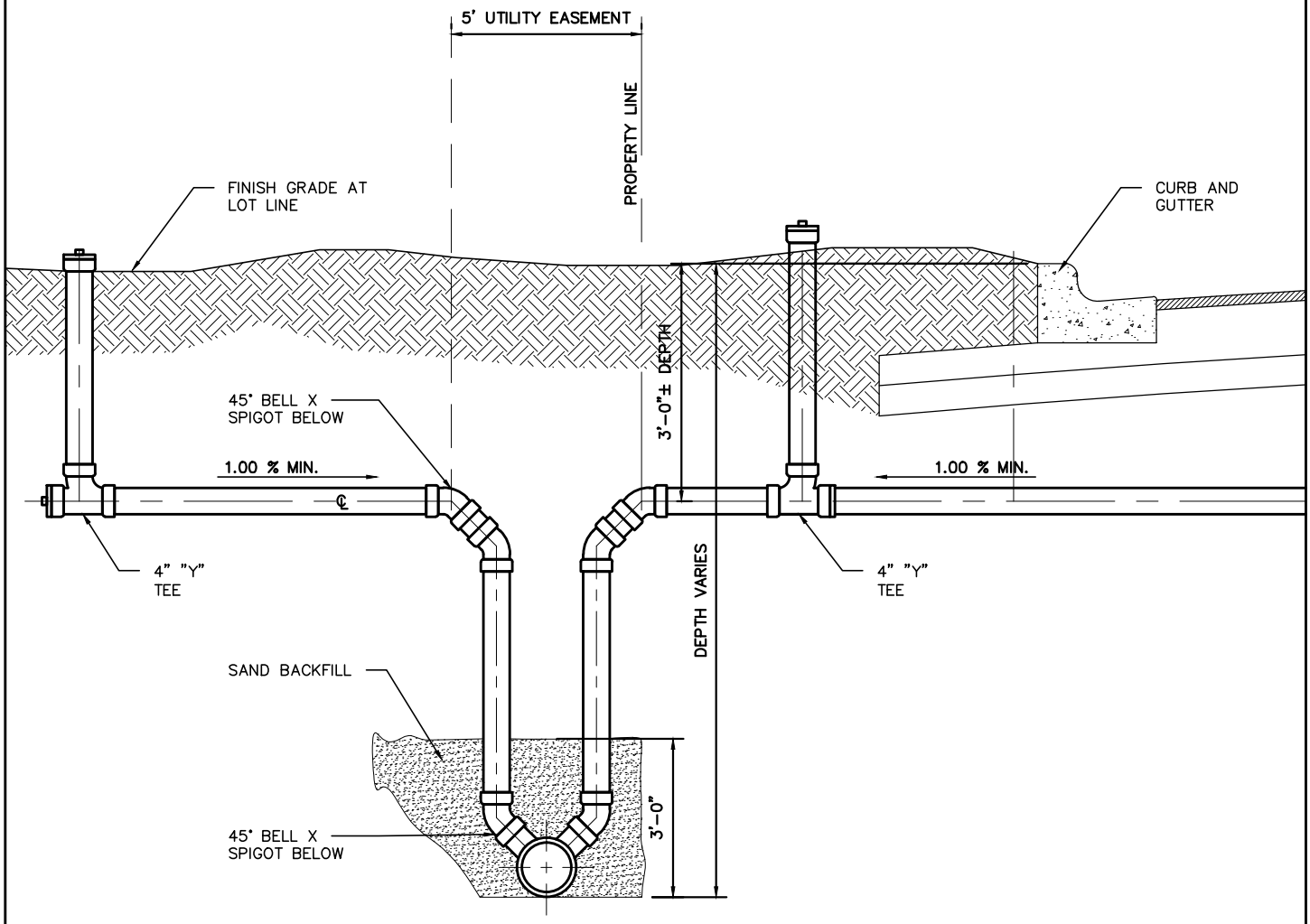

TYPICAL DOUBLE DEEP SERVICE CONNECTION

S-6	DOUBLE DEEP SERVICE CONNECTION DETAIL		THE CITY OF EDINBURG PUBLIC WORKS DEPARTMENT
	SCALE: N.T.S.	REVISED: AB	
	DATE: FEBRUARY, 2014	DRAWN BY: JAS	

Apr 10, 2014 – 1:27PM

NOTE: WHEN UTILITY LOCATED WITHIN CITY R.O.W., ALL BACKFILL IS SUBJECT TO INSPECTION AND APPROVAL BY THE CITY ENGINEER'S OFFICE

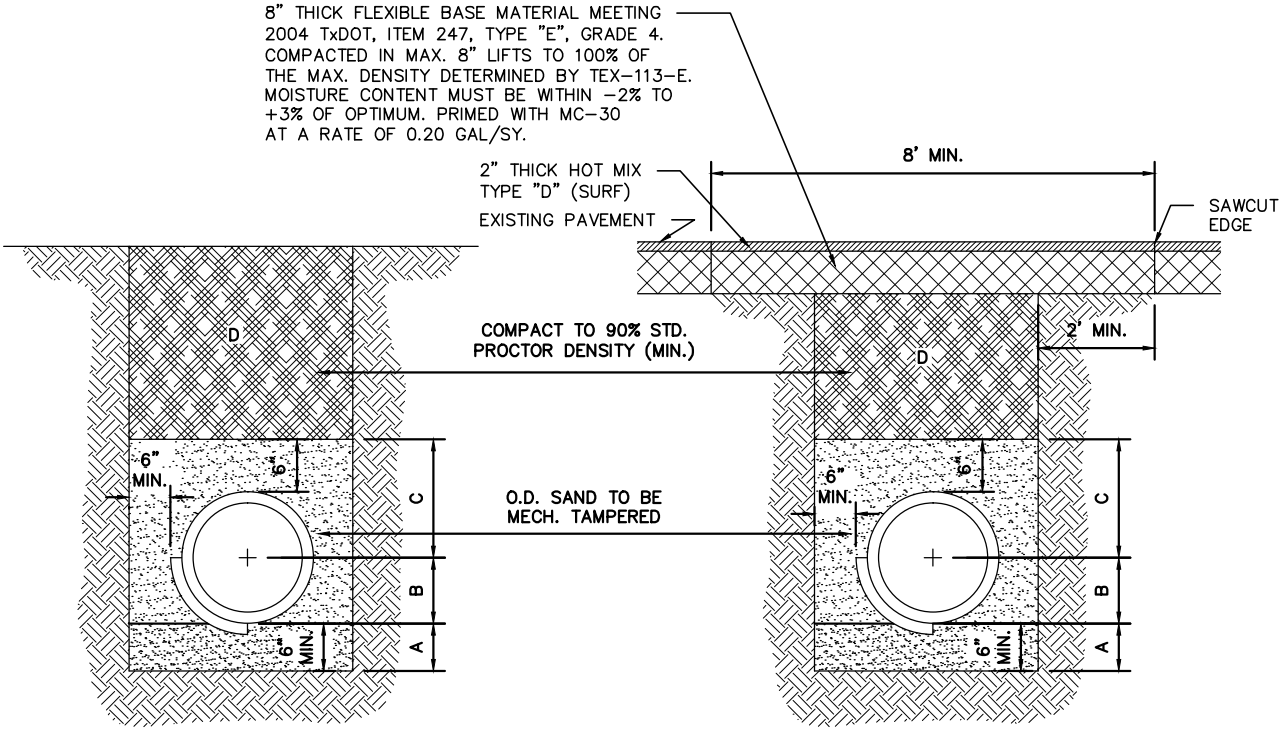

STANDARD PIPE BEDDING (MAIN & SERVICE LATERALS)

APPLICABLE BENEATH FUTURE/UNPAVED STREETS

A. SAND BEDDING PLACED BEFORE PIPE IS LAID UP TO FLOW LINE OF PIPE. (MIN. THICKNESS = 6")

B. SAND BACK FILL PLACED AFTER PIPE IS LAID FROM BOTTOM OF PIPE TO SPRING LINE OF PIPE. (4" LIFTS, MECH. TAMPED).

C. SAND BACK FILL PLACED FROM SPRING LINE OF PIPE TO 6" ABOVE TOP OF PIPE. (6" LIFTS, MECH. TAMPED).

D. FILL TRENCH W/SELECT BACKFILL, W/12" LIFTS COMPACT TO 90% STD. PROCTOR.

FOUNDATION PREPARATION (WELL POINTS, GRAVEL OR CEMENT STABILIZATION, OR APPROVED SUBSTITUTE) SHALL BE REQUIRED WHEN TRENCH BOTTOM IS UNSTABLE.

BACK FILLING AT STRUCTURES SHALL BE PLACED IN UNIFORM LAYERS, MOISTENED AS REQUIRED TO APPROXIMATE OPTIMUM MOISTURE CONTENTS AND COMPACTED TO 95% STANDARD PROCTOR DENSITY. THE THICKNESS OF EACH LOOSE LAYER SHALL BE SAND, APPROVED SITE SOIL OR OTHER APPROVED SUBSTITUTE.

STANDARD PIPE BEDDING (MAIN ONLY)

(PARALLEL WITHIN EXIST. STREET)

A. SAND BEDDING PLACED BEFORE PIPE IS LAID UP TO FLOW LINE OF PIPE. (MIN. THICKNESS = 6")

B. SAND BACK FILL PLACED AFTER PIPE IS LAID FROM BOTTOM OF PIPE TO SPRING LINE OF PIPE. (4" LIFTS, MECH. TAMPED).

C. SAND BACK FILL PLACED FROM SPRING LINE OF PIPE TO 6" ABOVE TOP OF PIPE. (6" LIFTS, MECH. TAMPED).

D. FILL TRENCH W/SELECT BACKFILL, W/12" LIFTS COMPACT TO 90% STD. PROCTOR.

FOUNDATION PREPARATION (WELL POINTS, GRAVEL OR CEMENT STABILIZATION, OR APPROVED SUBSTITUTE) SHALL BE REQUIRED WHEN TRENCH BOTTOM IS UNSTABLE.

BACK FILLING AT STRUCTURES SHALL BE PLACED IN UNIFORM LAYERS, MOISTENED AS REQUIRED TO APPROXIMATE OPTIMUM MOISTURE CONTENTS AND COMPACTED TO 95% STANDARD PROCTOR DENSITY. THE THICKNESS OF EACH LOOSE LAYER SHALL BE SAND, APPROVED SITE SOIL OR OTHER APPROVED SUBSTITUTE.

NOTE: ALL EXISTING/ACTIVE STREET CROSSINGS SHALL REQUIRE SAND BACKFILL OF ENTIRE TRENCH. (SEE DETAIL S-6)

Dec 27, 2013 - 3:03PM

S-7

SEWER STANDARD PIPE BEDDING DETAILS

SCALE: N.T.S.	REVISED: JAG
DATE: DECEMBER, 2013	DRAWN BY: JAG

THE CITY OF EDINBURG
PUBLIC WORKS DEPARTMENT

NOTE: WHEN UTILITY LOCATED WITHIN CITY R.O.W., ALL BACKFILL IS SUBJECT TO INSPECTION AND APPROVAL BY THE CITY ENGINEER'S OFFICE

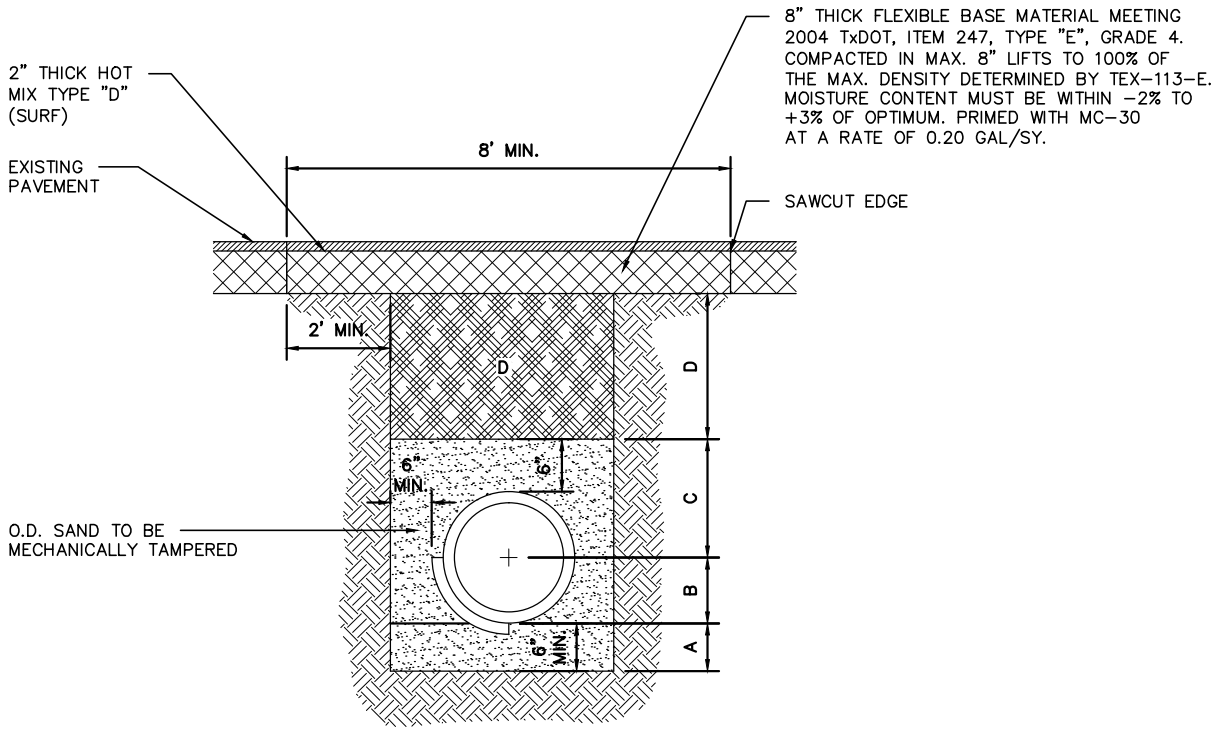

STANDARD PIPE BEDDING (MAIN & SERVICE LATERALS)

UNDER EXISTING/ACTIVE STREET CROSSINGS.

A. SAND BEDDING PLACED BEFORE PIPE IS LAID UP TO FLOW LINE OF PIPE. (MIN. THICKNESS = 6")

B. SAND BACK FILL PLACED AFTER PIPE IS LAID FROM BOTTOM OF PIPE TO SPRING LINE OF PIPE. (4" LIFTS, MECH. TAMPED).

C. SAND BACK FILL PLACED FROM SPRING LINE OF PIPE TO 6" ABOVE TOP OF PIPE. (6" LIFTS, MECH. TAMPED).

D. FILL TRENCH W/SELECT BACKFILL, W/12" LIFTS COMPACT TO 90% STD. PROCTOR.

FOUNDATION PREPARATION (WELL POINTS, GRAVEL OR CEMENT STABILIZATION, OR APPROVED SUBSTITUTE) SHALL BE REQUIRED WHEN TRENCH BOTTOM IS UNSTABLE.

BACK FILLING AT STRUCTURES SHALL BE PLACED IN UNIFORM LAYERS, MOISTENED AS REQUIRED TO APPROXIMATE OPTIMUM MOISTURE CONTENTS AND COMPACTED TO 95% STANDARD PROCTOR DENSITY. THE THICKNESS OF EACH LOOSE LAYER SHALL BE SAND, APPROVED SITE SOIL OR OTHER APPROVED SUBSTITUTE.

(WATER/SAN. SEWER)

S-8	UTILITY CROSSING AT EXISTING/ ACTIVE STREET DETAIL (WATER / SEWER)	THE CITY OF EDINBURG PUBLIC WORKS DEPARTMENT
	SCALE: N.T.S. / REVISED: JAG	
	DATE: DECEMBER, 2013 / DRAWN BY: RMM	

Dec 27, 2013 - 3:04PM

BORING INSTALLATION		
CARRIER PIPE SIZE	PIPE CASING SIZE	MIN. WALL THICKNESS
6"	14"	0.187"
8"	16"	0.187"
10"	18"	0.250"
12"	20"	0.250"
14", 15"	24"	0.344"
16"	24"	0.344"
18"	30"	0.375"
24"	36"	0.375"
36"	48"	0.625"

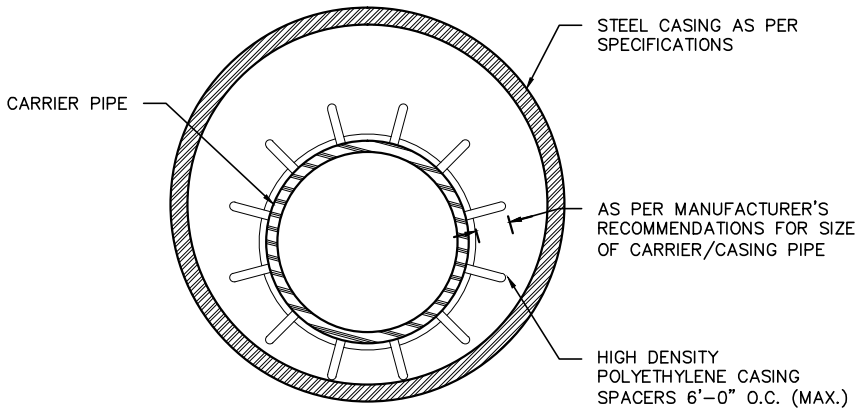

GENERAL NOTES:

1. ALL STEEL CASING SHALL BE WELDED.
2. STEEL CASING SHALL BE CLOSED AT EACH END USING BRICK OR BLOCK AND MORTAR GROUTED.
3. CASING SPACERS SHALL BE USED TO INSTALL THE CARRIER PIPE INSIDE THE ENCASEMENT PIPE. CASING SPACERS SHALL FASTEN TIGHTLY ONTO THE CARRIER PIPE SO THAT WHEN THE CARRIER PIPE IS BEING INSTALLED THE SPACERS WILL NOT MOVE ALONG THE PIPELINE. CASING SPACERS SHALL BE DOUBLED ON EACH END OF THE ENCASEMENT.
4. PROJECTION – TYPE CASING SPACERS SHALL BE CONSTRUCTED OF PREFORMED SECTIONS OF HIGH DENSITY POLYETHYLENE. THE FLEXIBLE SECTIONS SHALL BE JOINED TOGETHER AROUND THE PIPE TO PROVIDE A MINIMUM OF 16 PLASTIC PROJECTIONS PER SPACER SECTION.
5. INSTALLATION AND SIZE OF SPACERS SHALL BE AS PER MANUFACTURER'S RECOMMENDATIONS.

Dec 27, 2013 – 3:04PM

S-9

UTILITY LINE BORE DETAIL

SCALE: N.T.S.	REVISED: JAG
DATE: DECEMBER, 2013	DRAWN BY: RMM

THE CITY OF EDINBURG
PUBLIC WORKS DEPARTMENT

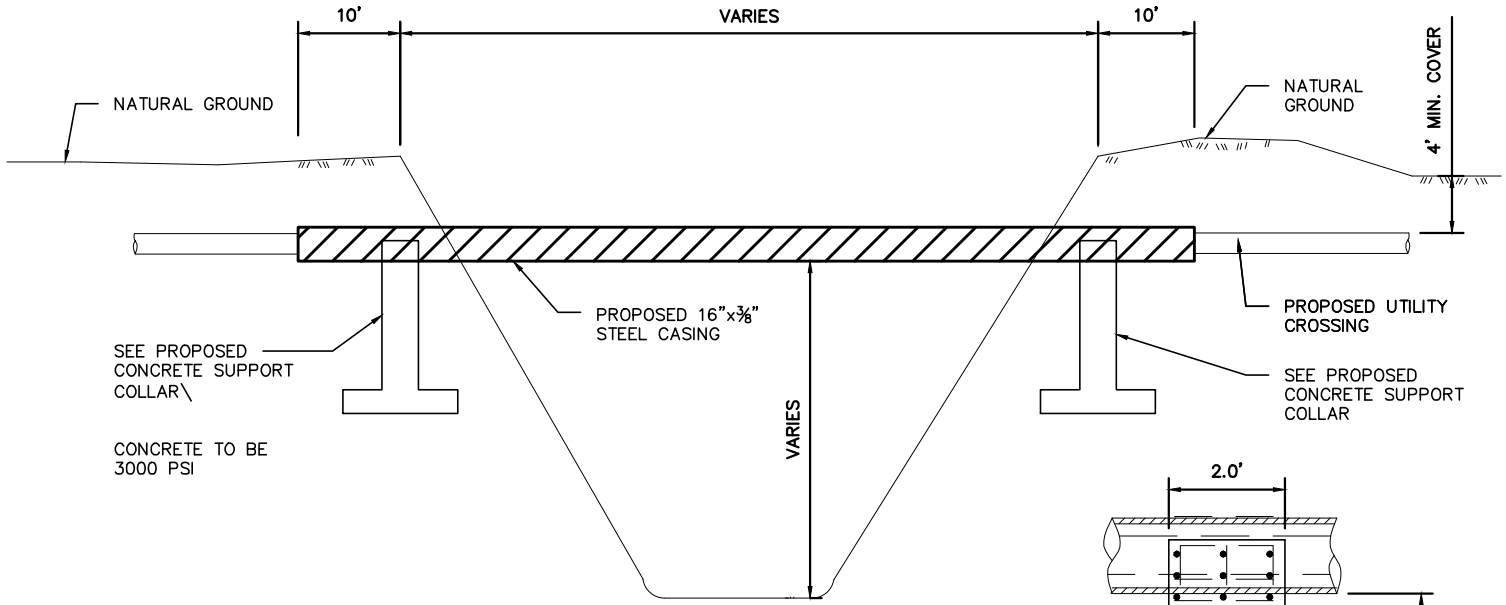

DRAIN DITCH CROSSING SECTION

N.T.S.

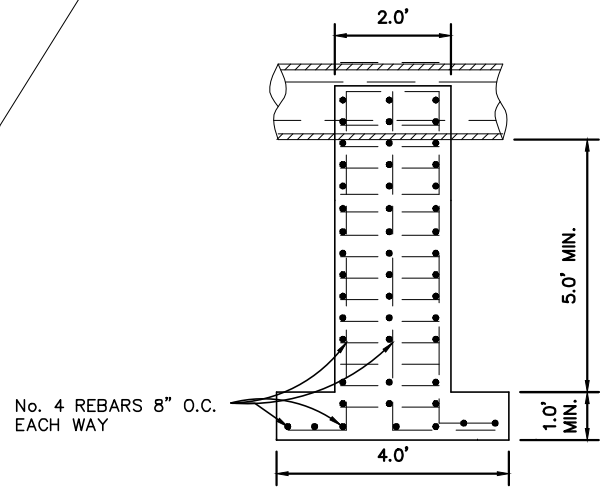

DETAIL

Dec 27, 2013 – 3:05PM

S-10

SECTION DETAILS

DRAIN DITCH CROSSING

SCALE: N.T.S.	REVISED: I.P.
DATE: DECEMBER, 2013	DRAWN BY: AB

THE CITY OF EDINBURG

PUBLIC WORKS DEPARTMENT

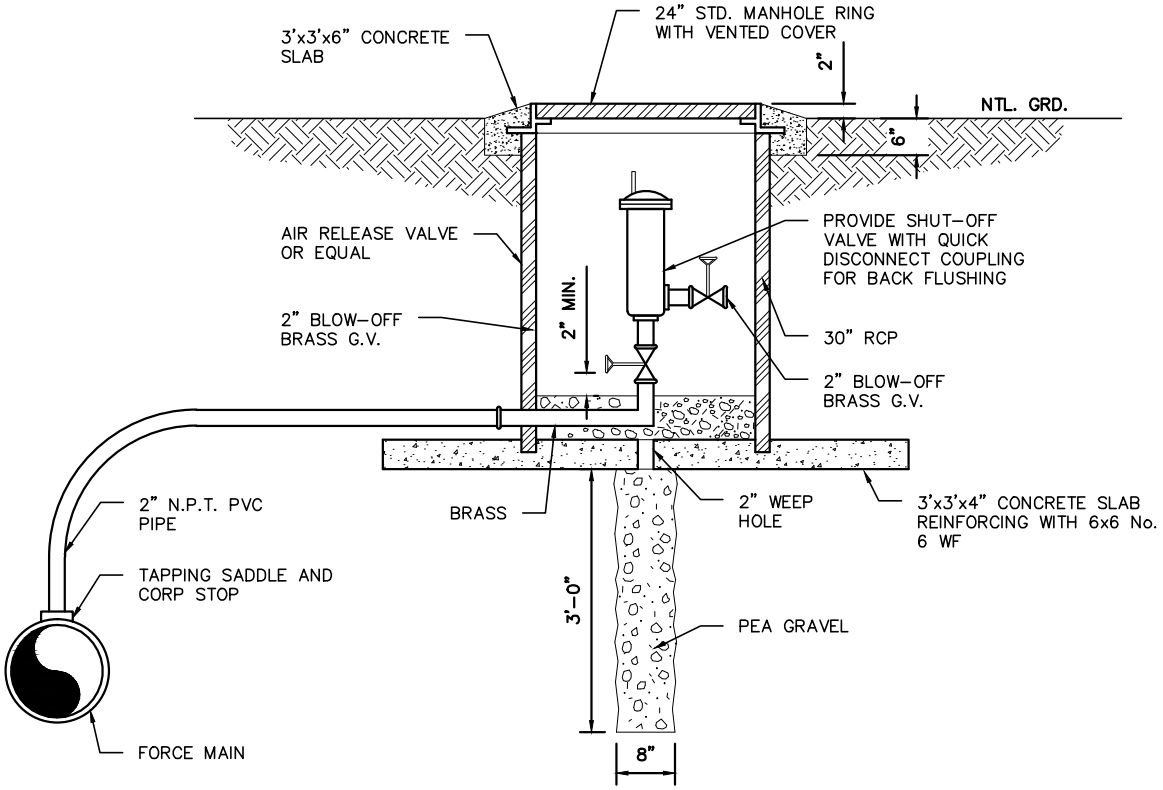

INSTALLATION DETAIL
SEWAGE AIR RELEASE VALVE

S-11	SEWAGE AIR RELEASE VALVE DETAILS	THE CITY OF EDINBURG PUBLIC WORKS DEPARTMENT
	SCALE: N.T.S.	REVISED: IP
	DATE: DECEMBER, 2013	DRAWN BY: RMM

Dec 27, 2013 – 3:05PM

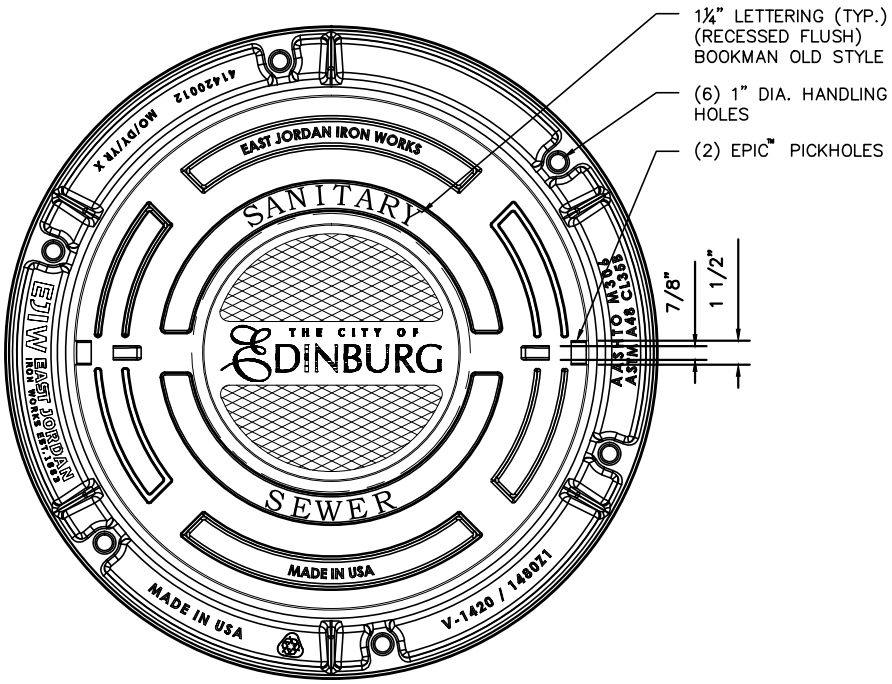

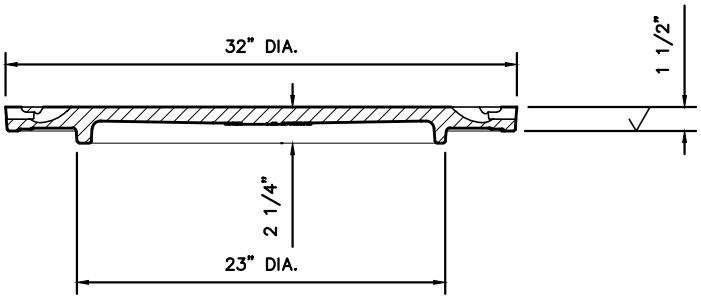

COVER SECTION

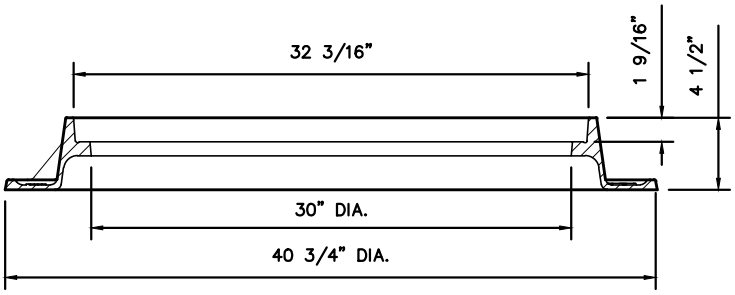

FRAME SECTION

CITY STANDARD ROADWAY MANHOLE RING AND COVER CASTING DETAIL

S-12	MANHOLE COVER DETAILS	THE CITY OF EDINBURG PUBLIC WORKS DEPARTMENT
	SCALE: N.T.S.	REVISED: JAG
	DATE: DECEMBER, 2013	DRAWN BY: RMM

Dec 27, 2013 – 3:06PM

This Page Intentionally Left Blank

SECTION 4 – CONSTRUCTION PLANS SUBMITTAL POLICY

4.01 General Plans Submittals
- A. Preliminary Approval Phase
- B. Final Approval / Final Construction Plans

4.02 Drainage Plans Submittals
- A. Preliminary Approval Phase
- B. Final Approval / Final Construction Plans

4.03 Streets / Roadway Plans Submittals
- A. Preliminary Approval Phase
- B. Final Approval / Final Construction Plans

4.04 Water Distribution System Plans Submittals
- A. Preliminary Approval Phase
- B. Final Approval / Final Construction Plans

4.05 Sanitary Sewer Collection System Plans Submittals
- A. Preliminary Approval Phase
- B. Final Approval / Final Construction Plans

4.06 Stormwater Pollution Prevention Plans Submittals
- A. Preliminary Approval Phase
- B. Final Approval / Final Construction Plans

4.07 Construction Phase Requirements
- A. Plans Copies
- B. Cost Estimate
- C. Pre-Construction Conference
- D. Notice to Proceed
- E. Approved Plans
- F. Disturbed Areas Greater than 5 Acres
- G. Disturbed Areas Between 1 and 5 Acres
- H. Stormwater Permits
- I. Cut Sheets
- J. Changes to Plans
- K. As-Built Plans
- L. Certificate of Completion
- M. Guarantee of Work Performed

SECTION 4

CONSTRUCTION PLANS SUBMITTAL POLICY

4.01 General Plans Submittals

The purpose of this section is to define the general requirements for the submittal of plans for preliminary approval for all construction improvements. In accordance with Section 7.410 of the Unified Development Code, where plans and specifications have been approved by the City and a conflict arises, the City's Engineering Standards shall prevail, unless otherwise approved in writing by the Director of Public Works.

A. Preliminary Approval Phase

1. Cover Sheet:
   a. Name of Proposed Development
   b. City Council Members
   c. Planning and Zoning Members
   d. Director of Public Works
   e. Stamp of Staff Approval
   f. Vicinity Map
   g. Consulting Engineer information

2. Topography Sheet:
   a. Survey boundaries of proposed development
   b. Legal Description
   c. Seal and Signature by a Registered Professional Land Surveyor
   d. Contours at 1-foot intervals
   e. Show all existing infrastructures such as water, sewer, drainage, irrigation, Gas lines etc.

B. Final Approval Phase / Final Construction Plans

1. Final Cover Sheet (Finalized version of the Preliminary Phase)

2. Final Topography Sheet (Finalized version of the Preliminary Phase)

3. Final Drainage Plans (As noted in the following Sections)

4. Final Streets and Roadway Plans (As noted in the following Sections)

5. Final Water Distribution Plans (As noted in the following Sections)

6. Final Sanitary Sewer Collection Plans (As noted in the following Sections)

7. Final Stormwater Pollution Prevention Plan (SW3P) (As noted in the following Sections)

8. Final Traffic Control Plan (TCP) (As noted in the following Sections)

4.02 Drainage Plans Submittals

The purpose of this section is to define the specific requirements for the submittal of plans for preliminary approval and construction of drainage improvements.

A. Preliminary Approval Phase

1. A reproduction of that portion of the City's Drainage Master Plan showing the relationship of the area to be improved and the proposed improvements.

2. Drainage System Layout Sheet (24" x 36", 1" = 50' Scale):
   a. Proposed Subdivision Layout
   b. Street and Drainage Layout showing Streets with Connection to an Existing System and/or Outfall (City or other)
   c. Show flood elevation
   d. Show overland flow patterns
   e. Proposed Drainage System sized accordingly
   f. Proposed Concrete Manholes at 400-feet maximum spacing intervals (On-Site).
   g. Proposed curb inlets at maximum single curb length drainage of 600-feet.
   h. Overlay of City's Drainage Master Plan in the area being developed.
   i. Identify Drainage Sub-Areas
   j. Proposed Method of Detention
   k. Existing and proposed 1-foot contours intervals to 150-feet outside subdivision boundaries

B. Final Approval Phase / Final Construction Plans

1. Detailed final versions of all the required submittals in the Preliminary Approval Phase including any "red-lined" drawings prepared by City Staff.

2. Storm Sewer System Layout Sheet
   a. Direction of flow
   b. High Points
   c. Identification of existing/proposed storm sewer
   d. Identification of existing/proposed storm sewer inlets, manholes and junction boxes
   e. Proper slope for proposed storm sewer pipe
   f. Identification of grades for all curb and gutter
   g. Elevations of all top of manhole covers
   h. Provide all proposed inlet locations (600' maximum spacing)
   i. Identification of conflict with other utilities with proposed conflict design

3. Profile Sheets:
   a. Plan and profile of proposed storm sewer
   b. Pipe length, size, class, and slope
   c. Identification of inlets, manholes, junction boxes
   d. Flow lines at structures, outfalls; 50-foot intervals along storm sewer length
   e. Finished grade/natural ground
   f. Identification of Utility crossings / Conflicts
   g. Hydraulic Grade Line
   h. Top of curb elevations

i. Manhole rim / flowline elevations
j. Cross Sections
k. Trench protection limits

4. Bridge/Culvert Layouts:
   a. Plan and Profile
   b. Hydraulic calculations
   c. Applicable details (other than standard)

5. Drainage Ditches/Channels and Detention Basins:
   a. Grading Plan
   b. Earthwork calculations
   c. Typical Sections
   d. Hydraulic calculations
   e. Design water surface elevation
   f. Maintenance access
   g. Applicable details (other than standard)

6. Standard Drainage Details Sheet

4.03 Streets and Roadway Plans Submittals

The purpose of this section is to define the specific requirements for the submittal of plans for preliminary approval and construction of streets and roadway improvements.

A. Preliminary Approval Phase

1. A reproduction of that portion of the City's Thoroughfare Plan showing the relationship of the area to be improved and the proposed improvements to the City's street system.

2. Subdivision Street Layout Sheet:
   a. Proper right-of-way dedication interior and additional to existing streets
   b. Street geometry
   c. Street sign layout in accordance with TMUTCD
   d. Runoff flow direction
   e. High points (elevations top of curb)
   f. Curb radius at intersections as required
   g. Existing and proposed 1-foot contours intervals to 150-feet outside subdivision boundaries
   h. Drainage system
   i. Sidewalk Plan (4-foot Interior, 5-foot exterior) with applicable handicap ramps. Residential sidewalks within the subdivision shall be installed at building permit stage. **A separate Sidewalk Permit is required to be filed with the Director of Public Works.**

3. Street Lighting Layout Sheet
   a. Location of lights in accordance with Street Lighting Standards
   b. Details (As required for preliminary approval)

B. Final Approval Phase

1. Detailed final versions of all the required submittals in the Preliminary Approval Phase including any “red-lined” drawings prepared by City Staff.

4.04 Water Distribution System Plans Submittals

The purpose of this section is to define the specific requirements for the submittal of plans for preliminary approval and construction of water distribution system improvements.

A. Preliminary Approval Phase

1. A reproduction of that portion of the City’s Water Master Plan showing the relationship of the area to be improved and the proposed improvements.

2. Water Distribution System Layout Sheet:
   a. Existing Water Distribution System (City or other)
   b. Proposed Water Distribution System sized accordingly DR-18 / DR-25
   c. Proposed Water Valves at 600-foot spacing intervals (On-Site)
   d. Proposed Water Valves at 1000-foot spacing intervals (Off-Site)
   e. Proposed interior water distribution system within 5-ft easement. Additional easement widths may be required as deemed necessary by the Director of Public Works.
   f. Proposed Water Master Plan (distribution system).
   g. Show proposed fire hydrant locations spaced at 300-ft for commercial and 500-ft for residential.
   h. Tapping to City’s water distribution system with gate valve included.
   i. Existing and proposed 1-foot contours intervals to 150-feet outside subdivision boundaries
   j. Tapping to City’s water distribution system with gate valve included.

B. Final Approval Phase:

1. Detailed final versions of all the required submittals in the Preliminary Approval Phase including any “red-lined” drawings prepared by City Staff.

2. Water Distribution System Layout Sheet
   a. Proper identification of water mains size, type, linear footage and location
   b. Final location of valves, fire hydrants, water services
   c. Elevations of all fire hydrant bottom flange and valves top of cover
   d. Provide all proposed water mains to be bored crossing any existing streets
   e. Conflict with other utilities

3. Standard Water Distribution Details Sheet

4.05 Sanitary Sewer Collection System Submittals

The purpose of this section is to define the specific requirements for the submittal of plans for preliminary approval and construction of water and sanitary sewer collection system improvements.

A. Preliminary Approval Phase

1. A reproduction of that portion of the City's Wastewater Master Plan (collection system) showing the relationship of the area to be improved and the proposed improvements.

2. Sewer Collection System Layout Sheet:
   b. Existing Sewer Collection System (City or other)
   c. Proposed Sewer Collection System sized accordingly SDR-35 / SDR-26
   d. Proposed Fiberglass Manholes at 400-foot maximum spacing intervals (On-Site).
   e. Proposed interior sewer collection system within 5-ft easement.
   f. Proposed Wastewater Master Plan (collection system).
   g. Existing and proposed 1-foot contours intervals to 150-feet outside subdivision boundaries

B. Final Approval Phase

1. Detailed final versions of all the required submittals in the Preliminary Approval Phase including any "red-lined" drawings prepared by City Staff.

2. Sanitary Sewer Collection System Layout Sheet
   a. Plan and profile of proposed sewer construction
   b. Proper identification of sewer mains size, type, linear footage and location
   c. Proper slope for proposed sewer pipe
   d. Elevations of all top of manhole covers
   e. Provide all proposed sewer mains to be bored crossing any existing streets
   f. Conflict with other utilities with proposed conflict design
   g. A table indicating the number of sewer service connections and quantity in gallons per day of wastewater that will be added to the City Collection/Treatment System.
   h. Service locations

5. Profile Sheets:
   a. Plan and profile of proposed sanitary sewer
   b. Pipe length, size, class, and slope
   c. Identification of manholes
   d. Flow lines at structures, 50-foot intervals along storm sewer length
   e. Finished grade/natural ground
   f. Identification of Utility crossings / Conflicts
   g. Hydraulic Grade Line
   h. Top of curb elevations
   i. Manhole rim / flowline elevations
   j. Trench protection limits

7. Standard Sanitary Sewer Details Sheet

8. Traffic Control Plan

4.06 Stormwater Pollution Prevention Plans Submittals

The purpose of this section is to define the specific requirements for the submittal of plans for preliminary approval and construction of Stormwater Pollution Prevention Plans (SW3P).

A. Preliminary Approval Phase

1. Proposed Site Layout
   a. Silt Fencing Location
   b. Construction Access Locations

B. Final Approval Phase

1. Detailed final versions of all the required submittals in the Preliminary Approval Phase including:
   a. Final Silt Fencing Location
   b. Detailed Drainage Inlet Protection
   c. Final Construction Access Locations
   d. Standard SW3P Details Sheet

4.07 Construction Phase Requirements:

A. **Plans Copies** - Six (6) complete sets of plans, profiles, and specifications for all proposed improvements must be submitted showing location, size, depths, dimensions, and construction details.

B. **Cost Estimates** – A detailed cost estimate for all improvements including drainage, streets, water and sanitary sewer must be submitted prior to the scheduled Pre-Construction Conference (PCC) or issuance of a Notice to Proceed (NTP).

C. **Pre-Construction Conference (PCC)** - Shall be scheduled at a time and location designated by the City. **The Project Engineer whose seal is affixed to the plans and the Contractor must be present. Failure of either party to be present may result in postponement**.

D. **Notice to Proceed (NTP)** – A NTP from the Engineering Department shall be issued by the City at the time of the PCC advising the Engineer that construction of improvements may commence. ***No work may commence without a NTP.***

E. **Approved Plans** - After PCC, City Staff, Project Engineer, and Contractor will sign the plans, which shall be exclusively used during construction. Contractor must have one of the signed plans onsite at all times not a copy. If Contractor is found not to have the signed set of the plans on site, a Stop Work Order may be issued by the City and may not commence until the City has verified the accuracy of the work.

F. **Stormwater Permits** shall be posted at the construction site (See Stormwater Policy Section 5).

G. **Cut Sheets** - Project Engineer must provide the City cut sheets at minimum 50' intervals and set utility installation staking prior to construction.

H. **Changes to Plans** - Any deviations from the approved plans or change orders must be submitted to the Director of Public Works for approval.

I. **As-Built Plans** - Three sets of digital *(CD, AutoCad .dwg format)* and paper copies *(24 x 36)* of the certified "As-Built" plans at the completion of all improvements ***must be submitted prior to acceptance***. The sets will be reviewed by the Engineering Department for approval.

J. **Certificate of Completion** - A certification signed by the Project Engineer attesting to the completion of all improvements in accordance with the approved construction plans ***must be submitted prior to acceptance***.

K. **Guarantee of Work Performed** – For a period of one year upon final completion of all work, the City shall require a guarantee of performance of all improvements in the following manner,

1. A *performance bond* executed by a surety company holding a license to do business in the state, and acceptable to the City, in an amount equal to the cost of the improvements for a period of one year or,
2. A *trust agreement* whereby the developer has placed on deposit in a bank or trust company, in the name of the City and approved by the City, in a trust account a sum of money equal to the estimated cost of all site improvements.

This Page Intentionally Left Blank

SECTION 5 – STORMWATER POLICY

5.01 Stormwater Management Standards and Permitting

5.02 Storm Water Discharges for Construction Activities

A. Requirements for obtaining stormwater general permit coverage for construction projects that will disturb 5 or more acres, whether on their own or as part of a larger common plan of development.

B. Requirements for small construction sites – Those that disturb from 1 to less than 5 acres.

C. Requirements for small construction sites – Those that disturb less than 1 acre.

5.03 Erosion Control Measures

5.04 Table of Details

STW-1 Erosion Control Details

STW-2 Temporary Sediment Control Fence Details

STW-3 Temporary Erosion Control Logs – 1

STW-4 Temporary Erosion Control Logs – 2

STW-5 Temporary Erosion Control Construction Exit

5.1. Stormwater Management Standards and Permitting

In addition to the provisions of drainage that is intended to move stormwater safely thought the City and avoid flooding damage or safety risks, there is a need to clean stormwater to maintain the health of the ditches in the community by reducing or eliminating pollutants before they reach their destination. Avoidance, Minimization, and Mitigation can be applied as part of a stormwater management plan. Without proper stormwater management, all development will increase stormwater runoff volume and pollutant loading; thus, all developments shall be in conformance with Texas Commission on Environmental Quality (TCEQ) stormwater permitting requirements.

5.2. Storm Water Discharges for Construction Activities

A. Requirements for obtaining stormwater general permit coverage for construction projects that will disturb 5 or more acres, whether on their own or as part of a larger common plan of development.

When you disturb 5 acres or more of land or are part of a larger common plan of development that will disturb 5 or more acres of land, you must follow these steps before discharging storm water to any surface water in the state of Texas:

- Review your facility's compliance history ranking:
  - If your facility is new or has a ranking of "high" or "average," continue to Step 2.
  - If it is "poor," then your facility is not eligible for coverage under a general permit. You must apply for an individual permit instead.
- Read the general permit (TXR150000) to make sure it applies to your situation.
- Prepare and implement a Storm Water Pollution Prevention Plan. For more details, see Part III of General Permit TXR150000.
- Submit an original completed Notice of Intent (NOI) form with an original signature and fee as noted on the NOI.
- Before starting construction, post a copy of the Site Notice at the construction site. Leave the notice posted until construction is completed.
- Site Notice for Primary Operators of Large Construction Activities
- Site Notice for Secondary Operators of Large Construction Activities

B. Requirements for small construction sites--those that disturb from 1 to less than 5 acres

A construction general permit (TXR150000) is for construction activities disturbing at least 1 but less than 5 acres or is part of a common plan of development disturbing at least 1 but less than 5 acres.

You will need to follow these steps to discharge storm water from a small construction site to any surface water in the state:

- Review your facility's compliance history ranking:

    - If your facility either does not have a compliance history ranking or has a ranking of "high" or "average," continue with Item 2.

    - If it is "poor," then your facility is not eligible for coverage under a general permit but it may be eligible under an individual industrial wastewater permit.

- Read the general permit (TXR150000) to make sure it applies to your situation.

- Adhere to the requirements of the general permit (TXR150000).

- Prepare and implement a Storm Water Pollution Prevention Plan. For more details, please refer to Part III of the general permit (TXR150000).

- Sign and post a construction site notice.

- At least 2 days before beginning construction, provide a copy of the site notice to the operator of any Municipal Separate Storm Water Sewer System (MS4) into which storm water will be discharged.

MS4s include streets, channels, gutters, ditches or anything else that is publicly owned, designed or used to collect or transport storm water.

As long as you meet the conditions of this general permit, you are authorized to discharge storm water.

No notice of intent (NOI), notice of termination (NOT), or fee is required under this option—as long as the requirements of this general permit are followed.

C. **Requirements for small construction sites--those that disturb less than 1 acre**

If your construction project disturbs less than 1 acre and is not part of a larger common plan of development, coverage under General Permit (TXR150000) is not required.

If your project is part of a larger plan, the total number of acres disturbed under that larger plan must be considered when determining how this general permit (TXR150000) applies to you.

A construction activity is part of a larger common plan of development if it is completed in one or more of the following ways:

- in separate stages
- in separate phases
- in combination with other construction activities

It is identified by the documentation that identifies the scope of the project including such things as the following:

- plats
- blueprints
- marketing plans
- contracts
- building permits
- public notice or hearing
- zoning requests

It can include one operator or many operators.

Example: A subdivision is being built. You are grading 0.75 acres, another company is clearing 4 different acres, and a contractor is excavating another 0.5 acres. In this case, the total area that would be disturbed is 5.25 acres, so **each operator** would fall under the requirements associated with disturbing 5 or more acres.

5.3. Erosion Control Measures

There are two types of water erosion control measures; those that prevent initial movement (cover factor, non-structural measures) and those that reduce sediment from moving water (practice factor, structural measures). Erosion control measures must be properly deigned, installed and maintained if they are to accomplish their intended purpose and effectiveness.

1. Non-structural Erosion Control Measures:

a. Non-structural erosion control measures provide the best means of managing sediment from disturbed lands by preventing soil movement. Dissipating the kinetic energy of rainfall is by placing cover (e.g., straw, burlap, mulch, etc.) over disturbed areas to prevent initial sediment transport.

One or more effective practices are the use of vegetation. Vegetation measures can provide temporary cover to help control erosion during construction and permanent cover to stabilize a site after construction is completed. The measures include the use of sod, planting of temporary cover crops and establishing permanent cover crops.

Two or more different types of seeds must be used and usually with a hydro mulch when establishing a permanent dry land grass cover. It is important to establish vegetative cover as soon as possible in order to reduce erosion. An approved native seed mix design shall be used to reestablished vegetative cover in the City right-of-way. Hydro mulching is essential in establishing good stands of grass on moderate to steep slopes, and on other areas where it is difficult to establish vegetation.

2. Structural Erosion Control Measures:

a. Once erosion commences due to water, structural measures have to be utilized to reduce sediment transport from disturbed lands.

A. <u>Performance Objectives:</u>

1. The primary performance objectives of an erosion control plan include:

a. Conduct all land disturbance activities in a manner that effectively reduces accelerated soil erosion and reduces sediment transport and offsite deposition.
b. Design and construct all temporary or permanent facilities for the conveyance of water around, through, or from the disturbed area to limit the flow of the water non-erosive velocities.
c. Remove sediment caused by accelerated soil erosion from surface runoff water before it leaves the site.
d. Stabilized the areas of land disturbance with permanent vegetative cover or stormwater quality control measures.

Timing of implementation is one of the most critical factors involved in the control of erosion from developing and redeveloping sites.

NOTES:

1. FILTER SOCKS SHALL BE A MINIMUM OF 8" DIAMETER.
2. FILTER SHALL BE BOUND BY EITHER WIRE NYLO OR POLYPROPYLENE STRING. THE FILTER SOCKS SHALL BE COMPOSED ENTIRELY OF VEGETABLE MATTER.
3. FILTER SOCKS SHALL BE EMBEDDED IN THE SOIL A MINIMUM OF 4" AND WHERE POSSIBLE 1/2 THE HEIGHT OF THE HAY SOCK.
4. FILTER SOCKS SHALL BE PLACED IN A ROW WITH ENDS TIGHTLY ABUTTING THE ADJACENT SOCKS. THE SOCKS SHALL BE PLACED WITH BINDINGS PARALLEL TO THE GROUND.
5. FILTER SOCKS SHALL BE SECURELY ANCHORED IN PLACE WITH 3/8" DIA. REBAR OR 2" X 2" WOOD STAKES, DRIVEN THROUGH THE FILTER SOCKS. THE FIRST STAKE SHALL BE ANGLED TOWARDS THE PREVIOUSLY LAID SOCK TO FORCE THE HAY SOCKS TOGETHER.
6. THE GUIDELINES SHOWN HEREON ARE SUGGESTION ONLY AND MAY BE MODIFIED BY THE ENGINEER.
7. NO HAY BALES ARE ALLOWED.

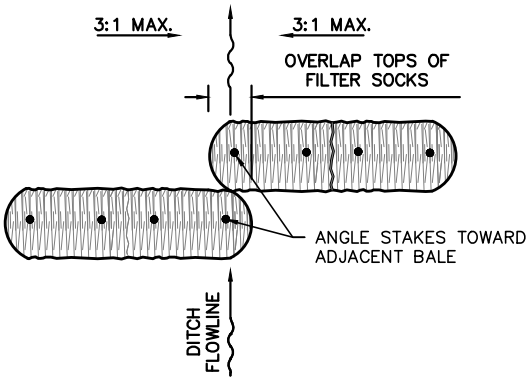

PLAN VIEW

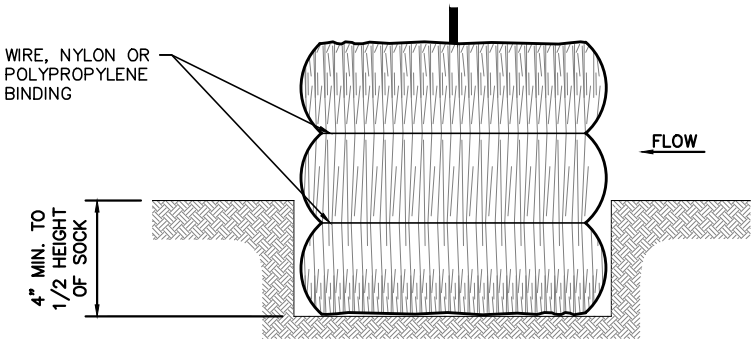

SECTION B–B

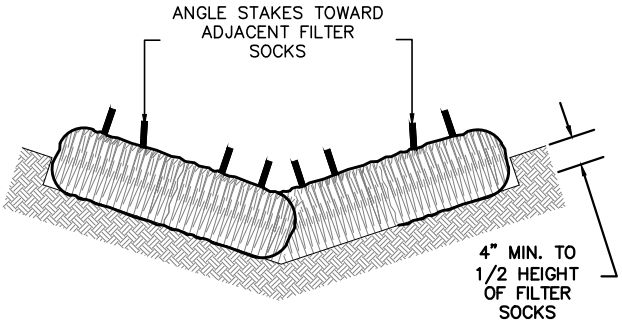

PROFILE VIEW

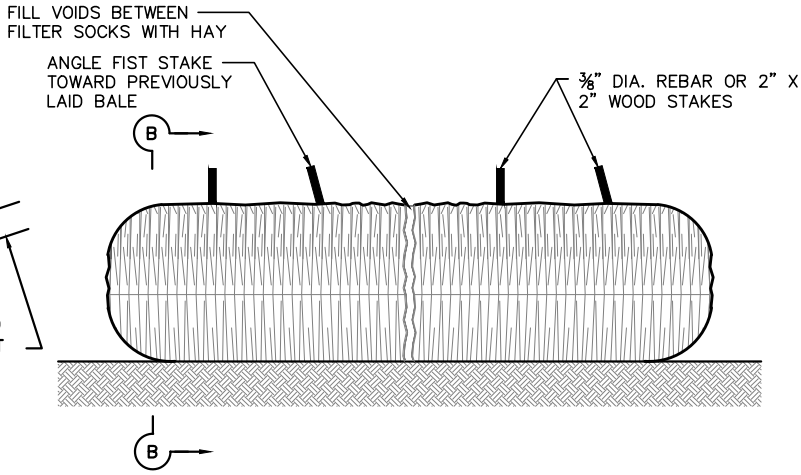

STW-1	HAY SOCKS EROSION CONTROL DETAILS		THE CITY OF EDINBURG PUBLIC WORKS DEPARTMENT
	SCALE: N.T.S.	REVISED: IP/OC	
	DATE: MARCH, 2014	DRAWN BY: RMM	

Mar 12, 2014 – 10:41AM

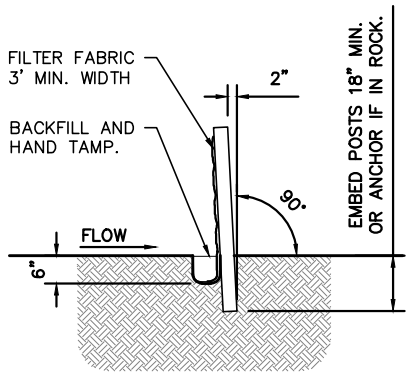

SECTION A–A

GENERAL NOTES

1. THE GUIDELINES SHOW HEREON ARE SUGGESTIONS ONLY AND MAY BE MODIFIED BY THE ENGINEER.

SEDIMENT CONTROL FENCE USAGE GUIDELINES

A SEDIMENT CONTROL FENCE MAY BE CONSTRUCTED NEAR THE DOWNSTREAM PERIMETER OF A DISTURBED AREA ALONG A CONTOUR TO INTERCEPT SEDIMENT FROM OVERLAND RUNOFF. A 2 YEAR STORM FREQUENCY MAY BE USED TO CALCULATE THE FLOW RATE TO BE FILTERED.

SEDIMENT CONTROL FENCE SHOULD BE SIZED TO FILTER A MAX. FLOW THROUGH RATE OF 100 GPM/FT². SEDIMENT CONTROL FENCE IS NOT RECOMMENDED TO CONTROL EROSION FROM A DRAINAGE AREA LARGER THAN 2 ACRES.

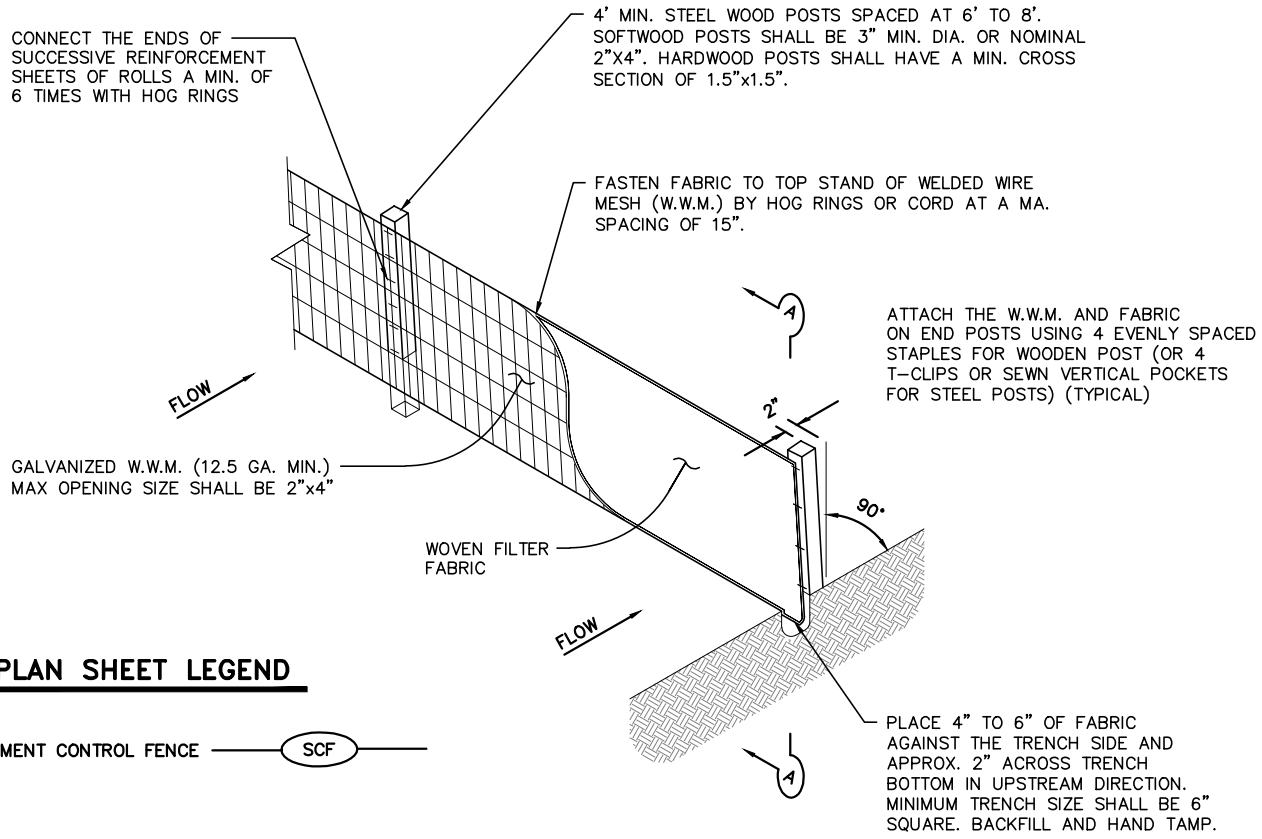

PLAN SHEET LEGEND

SEDIMENT CONTROL FENCE — SCF

STW-2	TEMPORARY SEDIMENT CONTROL FENCE – DETAILS	THE CITY OF EDINBURG PUBLIC WORKS DEPARTMENT
	SCALE: N.T.S. / REVISED: IP/PNL	
	DATE: MARCH, 2014 / DRAWN BY: RMM	

Mar 12, 2014 – 10:42AM

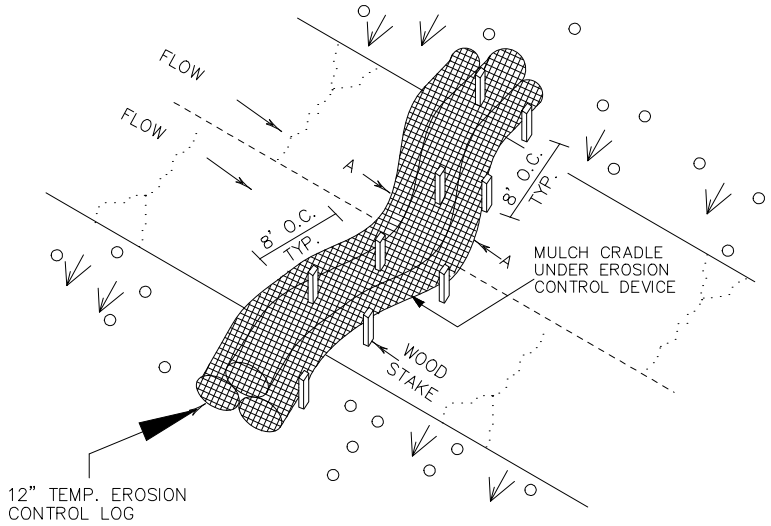

DITCH LINE SEDIMENT TRAP

DL-ST

PLANS SHEET LEGEND

DL-ST

DITCH LINE SEDIMENT TRAP

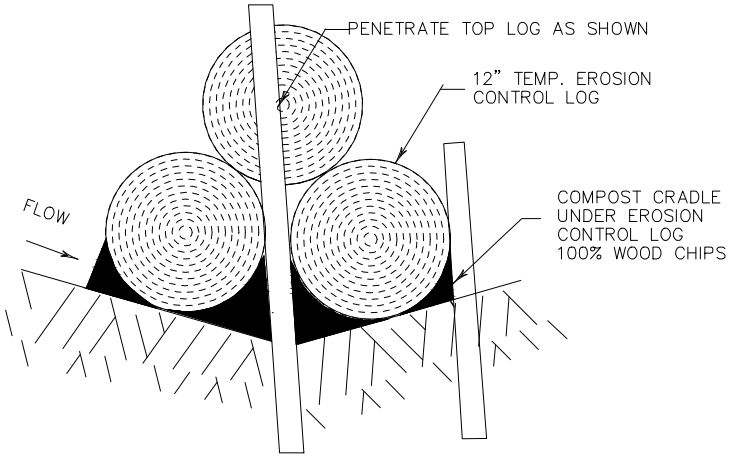

DITCH LINE SEDIMENT TRAP A–A

DL-ST

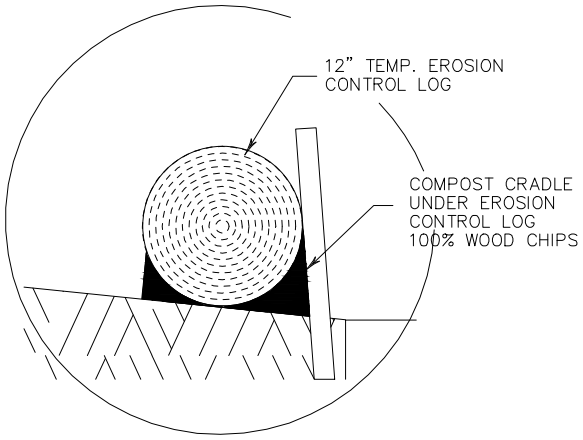

COMPOST CRADLE

DL-ST

STW-3

TEMPORARY EROSION CONTROL LOGS – 1

SCALE: N.T.S.	REVISED: O.C.
DATE: MARCH, 2014	DRAWN BY: RMM

THE CITY OF EDINBURG
PUBLIC WORKS DEPARTMENT

Mar 12, 2014 – 10:42AM

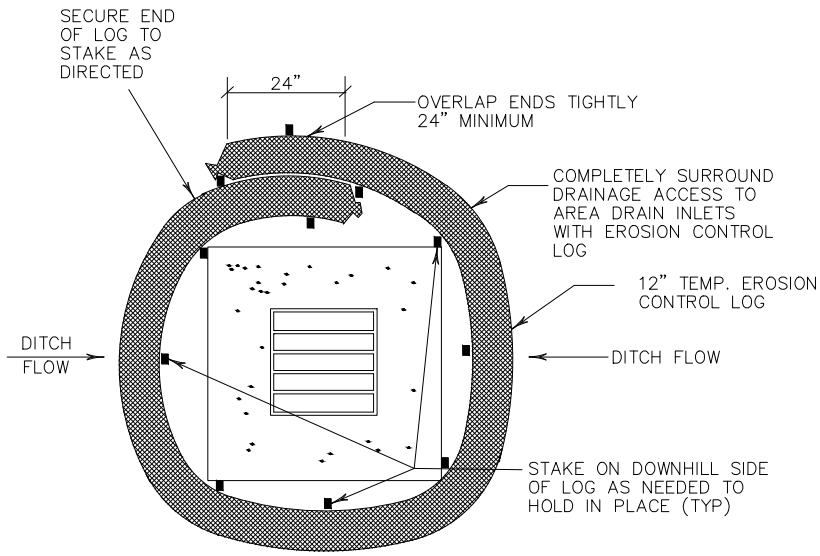

DROP INLET SEDIMENT TRAP

NTS

DI-ST

PLANS SHEET LEGEND

DI-ST — DROP INLET SEDIMENT TRAP

CI-ST — CURB INLET SEDIMENT TRAP

SEDIMENT BASIN & TRAP USAGE GUIDELINES

A sediment trap may be used to precipitate sediment out of runoff draining from an unstabilized area.

Traps: the drainage area for a sediment trap should not exceed 5 acres. The trap capacity should be 1800 CF/Acre (0.5" over the drainage area).

Sediment traps should be placed in the following locations:

1. Immediately preceding drain inlets
2. Just before the drainage enters a water course
3. Just before the drainage leaves the right of way
4. Just before the drainage leaves the construction limits where drainage flows away from the project

The trap should be cleaned when the capacity has been reduced by 1/2 or the sediment has accumulated to a depth of 1', whichever is less.
Cleaning and removal of accumulated sediment deposits is incidental and will not be paid for seperately.

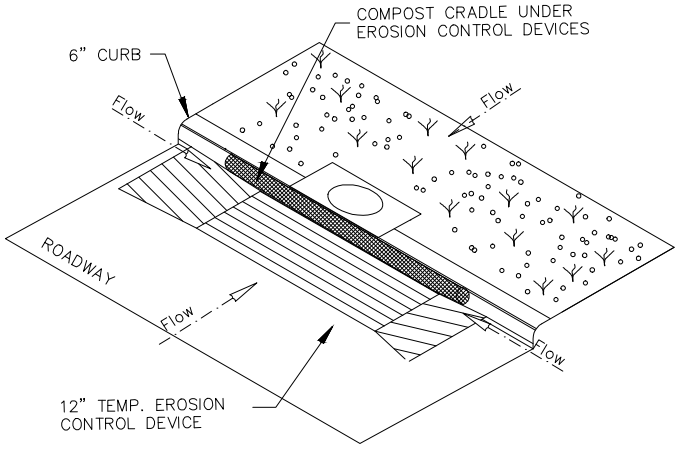

CURB INLET SEDIMENT TRAP

NTS

CI-ST

GENERAL NOTES

1. LENGTHS OF EROSION CONTROL LOGS SHALL BE IN ACCORDANCE WITH MANUFACTURER'S RECOMMENDATIONS AND AS REQUIRED FOR THE PURPOSE INTENDED. MAXIMUM LENGTH OF LOGS SHALL BE 30' FOR 12" DIAMETER LOGS.
2. UNLESS OTHERWISE DIRECTED, USE BIODEGRADABLE OR PHOTODEGRADABLE CONTAINMENT MESH ONLY WHERE LOG WILL REMAIN IN PLACE AS PART OF A VEGETATIVE SYSTEM. FOR TEMPORARY INSTALLATIONS, USE RECYCLABLE CONTAINMENT MESH.
3. STUFF LOGS WITH SUFFICIENT FILTER MATERIAL TO ACHIEVE DENSITY THAT WILL HOLD SHAPE WITHOUT EXCESSIVE DEFORMATION.
4. STAKES SHALL BE 2" X 2" WOOD 4' LONG, EMBEDDED SUCH THAT 2" PROTRUDES ABOVE LOG.
5. COMPOST CRADLE MATERIAL IS INCIDENTAL AND WILL NOT BE PAID FOR SEPARATELY.

Mar 12, 2014 – 10:43AM

STW-4

TEMPORARY EROSION CONTROL LOGS – 2

SCALE: N.T.S.	REVISED: O.C.
DATE: MARCH, 2014	DRAWN BY: RMM

THE CITY OF EDINBURG
PUBLIC WORKS DEPARTMENT

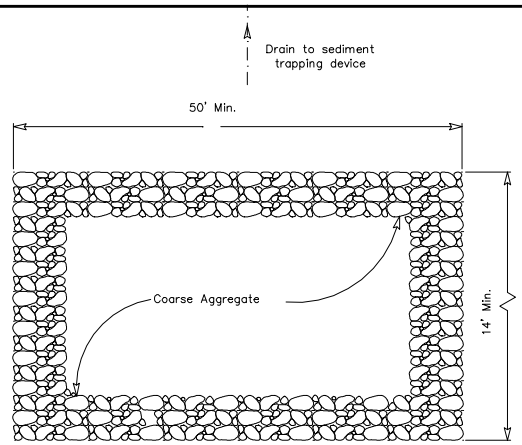

PLAN

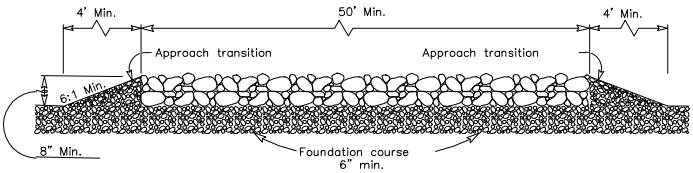

PROFILE

CONSTRUCTION EXIT (TYPE 1)

GENERAL NOTES

1. The length of the type 1 construction exit shall be as indicated on the plans, but not less than 50'.
2. The coarse aggregate should be open graded with a size of 4" to 8".
3. The approach transitions should be no steeper than 6:1 and constructed as directed by the Engineer.
4. The construction exit foundation course shall be flexible base, bituminous concrete, portland cement concrete or other material as approved by the Engineer.
5. The construction exit shall be graded to allow drainage to a sediment trapping device.
6. The guidelines shown hereon are suggestions only and may be modified by the Engineer.

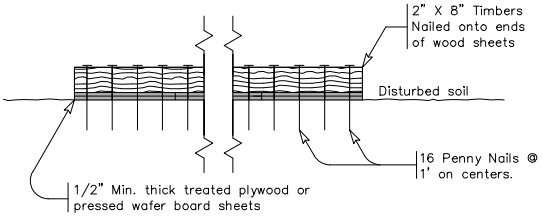

SECTION A–A

CONSTRUCTION EXIT (TYPE 3)

GENERAL NOTES

1. The length of the type 3 construction exit shall be as shown on the plans, or as directed by the Engineer.
2. The type 3 construction exit may be constructed from open graded crushed stone with a size of two to four inches spread a min. of 4" thick to the limits shown on the plans.
3. The treated timber planks shall be #2 grade min., and should be free from large and loose knots.
4. The guidelines shown hereon are suggestions only and may be modified by the Engineer.

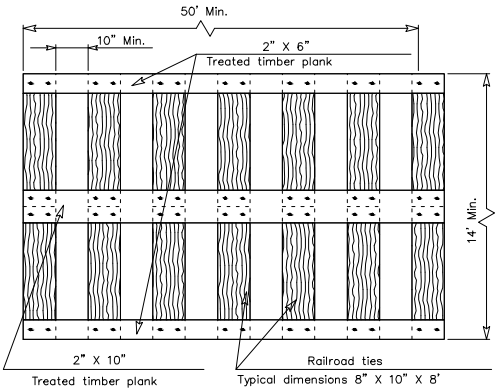

PLAN

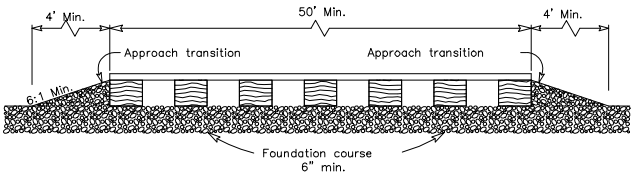

PROFILE

CONSTRUCTION EXIT (TYPE 2)

GENERAL NOTES

1. The length of the type 2 construction exit shall be as indicated on the plans, but not less than 50'.
2. The treated timber planks shall be attached to the railroad ties with 1/2"x 6" min. lag bolts. Other fasteners may be used as approved by the Engineer.
3. The treated timber planks shall be #2 grade min., and should be free from large and loose knots.
4. The approach transitions shall be no steeper than 6:1 and constructed as directed by the Engineer.
5. The construction exit foundation course shall be flexible base, bituminous concrete, portland cement concrete or other material as approved by the Engineer.
6. The construction exit should be graded to allow drainage to a sediment trapping device.
7. The guidelines shown hereon are suggestions only and may be modified by the Engineer.

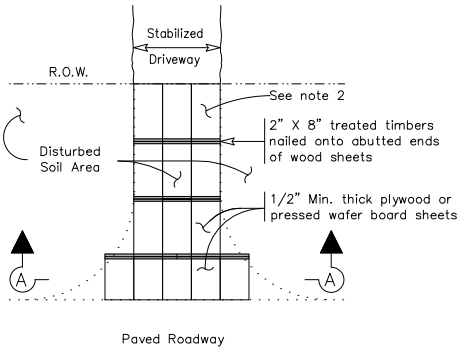

PLAN

STW-5

TEMPORARY EROSION CONTROL CONSTRUCTION EXIT

SCALE: N.T.S.	REVISED: O.C.
DATE: MARCH, 2014	DRAWN BY: RMM

THE CITY OF EDINBURG
PUBLIC WORKS DEPARTMENT

Mar 12, 2014 – 10:44AM

THE CITY OF EDINBURG

DEPARTMENT OF PUBLIC WORKS

415 W. University Dr.
Edinburg, Texas 78541
(956) 388-8210
(956) 388-8211
(956) 383-7111 Fax

2014 Standards Manual
Construction & Development Requirements